ROMANO
Indoor & Outdoor Solutions

SPEC SHEET

NERO / BATH SPOUT

Bianca Swivel Bath Spout



RANGE
Bianca
TYPE
Bath spout
FINISHES
Brushed Bronze, Brushed Gold, Brushed Nickel, Chrome, Gunmetal, Matte Black
CODE
NR207CH / NR207MB / NR207BG / NR207BN / NR207GM / NR207BZ
MATERIAL
Brass

WARRANTY (DOMESTIC USE)

Products or parts: 25 years replacement on all finishes / Parts and labour: 2 years replacement products or parts and labour

Conditions: installed by a licensed plumber; proof of purchase; residential use. Summary of the Nero warranty policy NWP2026.3 (sold after 1 May 2024), checked 7 November 2026. Full terms from Romano or the brand.

FEATURES

- Brass

DIMENSIONS

The dimension drawing and full specifications from Nero follow on the next page.

Romano Indoor & Outdoor Solutions, 4/126 Canterbury Rd, Kilsyth South VIC 3137. 03 9720 4633. sales@romanoios.com.au

Bianca Swivel Bath Spout Only

Nero

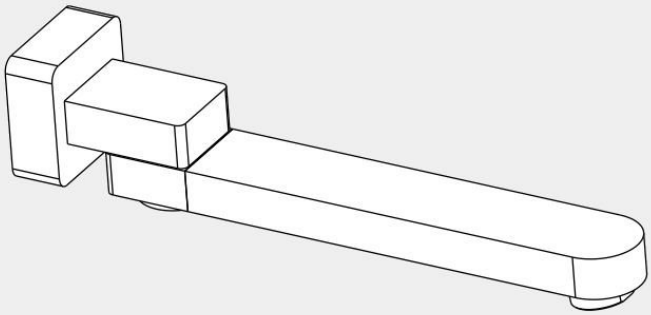

Versions:202506

Drawing

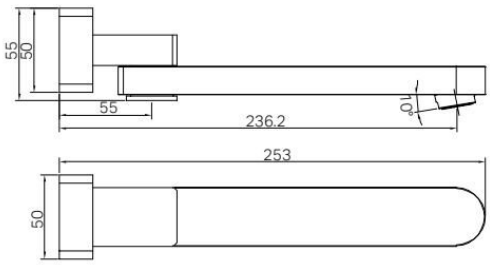

Specifications

Watermark License
WM-060073

Temperature Rating
Min 1˚C-Max 75˚C

Pressure Rating
Min 150kpa - Max 500kpa

Packaging Includes

1 x Spout

Finish & SKU

Chrome NR207CH	Gun Metal NR207GM	Brushed Nickel NR207BN
Matte Black NR207MB	Brushed Gold NR207BG	Brushed Bronze NR207BZ

*Dimensions are nominal measurements only.

Installation Instruction

GENERAL INSTRUCTIONS:

- This product must be installed by a licensed plumber. Ensure that your plumbing installation conforms to the Australian/New Zealand Standard AS/NZS 3500.
- All pipework must be thoroughly flushed prior to the installation of the mixer. In-line filters must be fitted on both hot and cold supplies to prevent foreign particles from damaging the ceramic cartridge.
- All outlets used primarily for personal hygiene must deliver water at a safe temperature in accordance with regional regulations.

NOTE:

- Do not hydrostatic test the installation with this mixer installed. Damage to the ceramic cartridge may occur.
- Do not remove the ceramic cartridge from the mixer when installing.
- After installation, all connections must be checked for leaks.
- This mixer is not recommended for use in uncontrolled heating systems such as wet-backs or solar heating units unless a suitable tempering valve is fitted.
- If limited water flow is experienced, locate aerator and filter washers and clean away foreign material as required.
- It is the responsibility of the plumber to ensure a waterproof seal is achieved between the product and mounting surface. If in doubt about the quality of the seal, remove the product and reinstall.

MAINTENANCE AND CARE:

- Regularly check the mixer and connections for signs of wear or leaks.
- Clean the tap with mild soapy water to maintain its appearance, avoiding harsh chemicals and abrasive materials that may damage the finish.

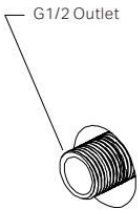

1. Ensure that the G1/2 outlet thread is less than 14mm, trim the outlet if necessary to achieve the desired fit.
Apply the G1/2 water outlet connection with Teflon tape to ensure a watertight seal.

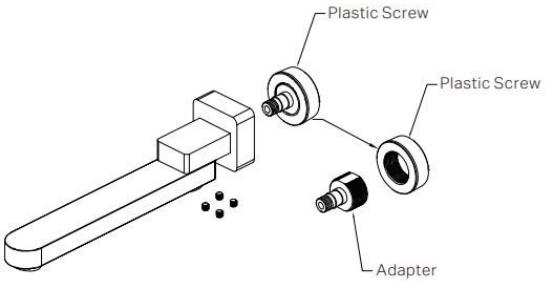

2. Unscrew the grub screws, and unscrew the adapter and plastic screw.

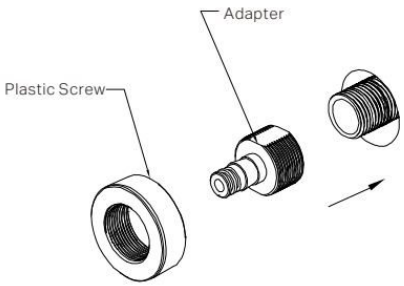

3. Screw the adapter and plastic screw in a row.

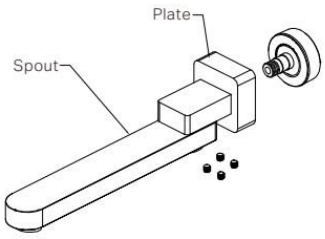

4. Insert the spout and tighten the four grub screws.

FINAL INSPECTION:

- Ensure the tap operates smoothly and that there are no leaks at the connections.
- Clean the area and the newly installed tap with a soft cloth to remove any installation residues.

Pages from Nero's own specification. Ask us about this product, we're happy to help.
Romano Indoor & Outdoor Solutions, 4/126 Canterbury Rd, Kilsyth South VIC 3137. 03 9720 4633. sales@romanoios.com.au