ROMANO
Indoor & Outdoor Solutions

SPEC SHEET

FIMA / BASIN MIXER

Park Lane Three Hole Basin Set



RANGE
Park Lane
TYPE
Basin mixer
CODE
F1301
MADE IN
Italy

WARRANTY (DOMESTIC USE)

Cartridge: 20 years replacement / Products and parts: 10 years replacement / Labour: 3 years / Electroplated finish: 5 years

Conditions: installed by a licensed plumber to national standards; proof of purchase, original owner; flow regulator and isolation tap fitted, pressure within limits. Summary of the Abey warranty for Fima (sold from 1 November 2025), checked 7 November 2026. Full terms from Romano or the brand.

FEATURES

- swivel spout
- n. 4 flexible hoses
- 1"1/4 brass click clack waste
- maximum flow rate at 3 bar:

DIMENSIONS

The dimension drawing and full specifications from Fima follow on the next page.

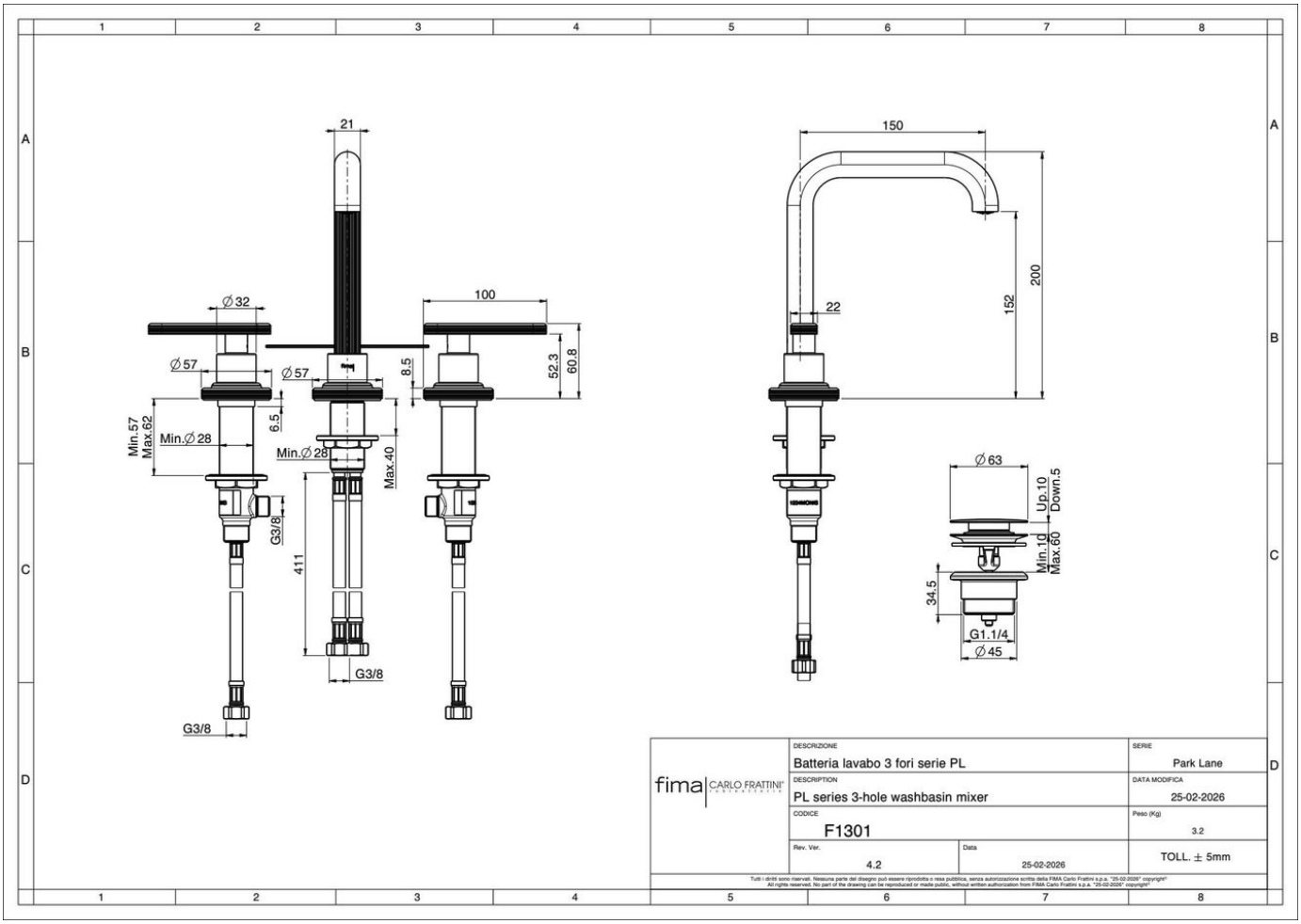
21
100
150
Ø32
Ø57
Ø57
8.5
52.3
60.8
22
152
200
Min.57
Max.62
Min.Ø28
6.5
Min.Ø28
Max.40
Ø63
Up.10
Down.5
Min.10
Max.60
34.5
G1.1/4
Ø45
G3/8
411
G3/8
G3/8
fima CARLO FRATTINI
DESCRIZIONE
Batteria lavabo 3 fori serie PL
SERIE
Park Lane
DESCRIPTION
PL series 3-hole washbasin mixer
DATA MODIFICA
25-02-2026
CODICE
F1301
Peso (Kg)
3.2
Rev. Ver.
4.2
Data
25-02-2026
TOLL. ± 5mm