ROMANO
Indoor & Outdoor Solutions

SPEC SHEET

FIENZA / WALL MIXER

Eleanor Wall Mixer



RANGE
Eleanor
TYPE
Wall mixer
FINISHES
Urban Brass (ceramic handle), Brushed Nickel (ceramic handle), Matte Black (ceramic handle), Chrome (ceramic handle)
CODE
202101-LF
MATERIAL
Brass

WARRANTY (DOMESTIC USE)

Cartridge, body and chrome finish: Lifetime / PVD finishes: 10 years / Labour: 1 year (cartridge 15 years)

Conditions: installed by a licensed tradesperson; proof of purchase; original owner. Summary of the Fienza warranty (from 1 September 2023), checked 7 November 2026. Full terms from Romano or the brand.

DIMENSIONS (MM)

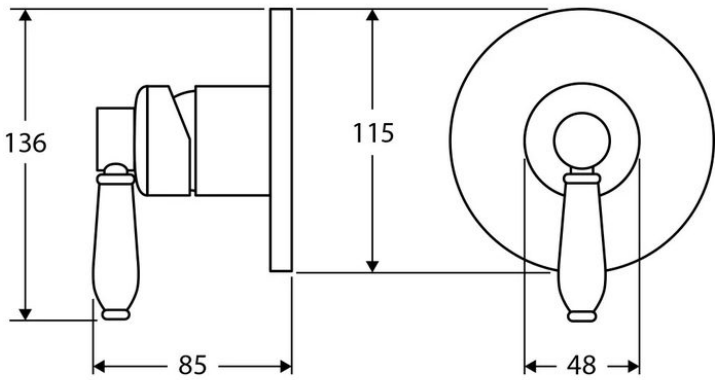

Romano Indoor & Outdoor Solutions, 4/126 Canterbury Rd, Kilsyth South VIC 3137. 03 9720 4633. sales@romanoios.com.au