ROMANO
Indoor & Outdoor Solutions

SPEC SHEET

DORF / KITCHEN MIXER

Kip Sink Mixer



RANGE
Kip
TYPE
Kitchen mixer
FINISHES
Chrome, Matte Black
CODE
872880C5AF / 872880B5AF
WELS RATING
5 star
FLOW
6.0 litres a minute
MATERIAL
Brass

WARRANTY

Ask us for the warranty terms for this product: 03 9720 4633 or sales@romanoios.com.au.

FEATURES

- Silicone aerator resists limescale build-up
- Lead free brass
- Ceramic disc cartridge (35 mm)
- Retractable pull-out hose
- WELS rated

DIMENSIONS

The dimension drawing and full specifications from Dorf follow on the next page.

KIP - SINK MIXER

WATER EFFICIENT TAPWARE

PLUMBERS INSTALLATION INSTRUCTIONS

IMPORTANT

Pressure & Temperature Requirements.

- Hot and cold water inlet pressures should be equal.
- Static Inlet pressure range : 150-1000 kPa

  New Regulation:- 500 kPa maximum static pressure at any outlet within a building. (Ref. AS/NZS 3500.1-2003, Clause 3.3.4)
- Maximum hot water temperature : 80℃.

Deck Requirements

- Deck thickness : 45mm maximum
- Tap body hole (in deck) : Ø34-36mm

Important Information

- **Not suitable for gravity feed systems.**
- **Mixer is fitted with a 5 L/min flow regulated aerator insert. This low flow rate may not be suitable for connection to some Instantaneous Gas Water Heaters, some Tempering Valves, some Solar Water Heaters & some Thermostatic Mixing Valves. Check with the manufacturers of these products. Note:-An 8 L/min aerator insert kit (Part No. 20742), is available if required.**
- **Isolating stop taps must be fitted to the hot & cold water supply connections. (Part No. 842018C - Mini cistern 1/4T)**
- **All pipework must be thoroughly flushed prior to installation, as foreign materials may block the flow regulating device and reduce the flow of water. Note: Aerator insert housing must be retightened to prevent removal by hand.**

Installation

1) From fixing pack fit 'O'ring (10) into groove in base ring (9). Screw stud (13) into underside of mixer body (8). Locate base ring (9) into base of mixer body (8).
2) *Flexible Tail Mixer Connections*: Apply suitable lubricant to 'O'rings (17). Fit flexible tail (16) (with red indication) into hole marked 'H' in underside of mixer body (8). Hand tighten the tail, ensuring the 'O'ring (17) has fully entered the sealing bore to provide a watertight joint. Fit other flexible tail (with blue indication) into remaining hole in a similar manner.
3) Insert the inlet connection end (15) of each flexible tail (16) through the hole in the deck. Place mixer over deck hole, fit gasket (11) and fixing plate (12) over stud (13) then screw on fixing nut (14). Rotate the base ring (9) so that the **Dorf** marking is facing the front, position mixer as required then tighten fixing nut (14) using a suitable spanner.
4) *Flexible Tail Inlet Connections*: Connect the flexible tails (16) to the hot and cold isolating stop taps, hand tighten the connecting nut (15) until rubber cone contacts the sealing face of the connection end, then tighten a further one turn to provide a watertight joint.
   Important: Flexible tails must not be kinked, twisted or in tension when installed. (Minimum Bend Radius:- 50mm) Do not install flexible tails where subject to ultra violet light.

Replacing Cartridge (Fig. 1)

1) Turn off hot and cold water supplies at isolating stop taps.
2) Carefully remove plug (3) before using a 2.5mm allen key (4) to loosen grub screw (2) and remove handle (1). Remove cap (5) taking care not to damage the decorative finish. Unscrew nut (6) then lift out old cartridge (7).
3) Ensure inside face of mixer body (8) is clean. Check that seal is in position in base of new cartridge (7). Fit new cartridge (7) into mixer body (8), taking care that two lugs on base of cartridge (7) fit into mating holes in mixer body (8).
4) Screw on nut (6). **Important**:- Nut (6) should be tightened to a torque of 10 Nm.
5) Replace cap (5), tightening by hand. Fit handle (1) taking care that it is pushed fully down, then tighten grub screw (2). Replace plug (3) taking care not to damage the decorative finish.
6) Turn on isolating stop taps and check operation.

Replacing Aerator Insert (Fig. 1)

1) Carefully remove aerator housing (18) from mixer body (8), taking care not to damage the decorative finish.
2) Remove 'O'Ring (20) & aerator insert (19) from aerator housing (18). Check that aerator housing (18) is clean. Deposits of lime can be removed by washing in a vinegar solution.
3) Fit new aerator insert (19) into aerator housing (18) followed by 'O'Ring (20) then screw assembly into mixer body (8) and tighten securely (to prevent removal by hand).

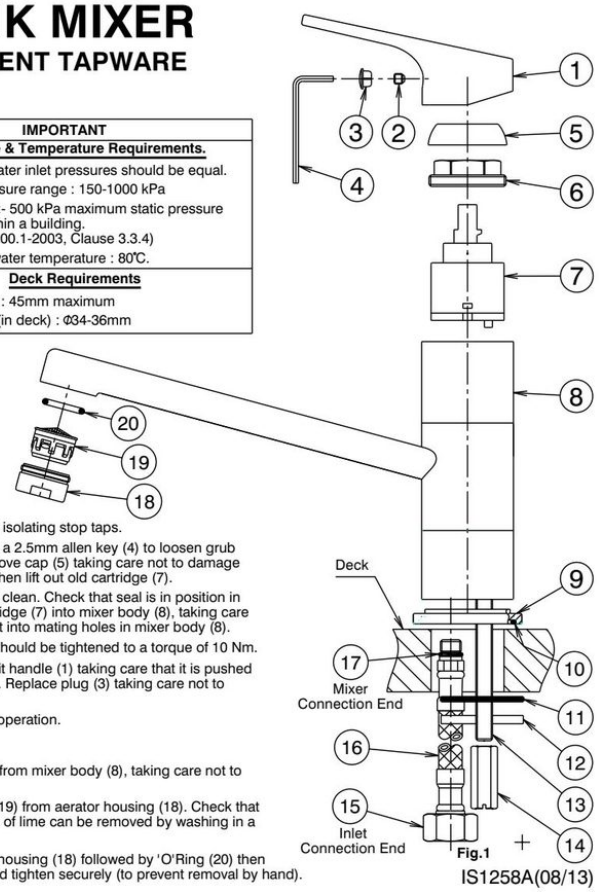

Fig.1

IS1258A(08/13)