ROMANO
Indoor & Outdoor Solutions

SPEC SHEET

ZENMO / LAUNDRY TROUGH

Lavassa Double Bowl Laundry Trough and Cabinet



RANGE
Lavassa
TYPE
Laundry trough
BOWLS
Double
MATERIAL
Stainless steel
SIZES
1170 x 510 x 870 mm
FINISHES
Cabinet White
CODE
LD1250 LAVASSA Double Bowl Laundry Trough and Cabinet

WARRANTY (DOMESTIC USE)

Laundry stainless steel tub: 25 years / Laundry cabinet (metal): 2 years

Conditions: installed by a licensed plumber, receipt of purchase; original purchaser, faulty materials or workmanship; domestic use. Summary of the Zenmo (ECT Global) toilet suite warranty, from 1 January 2021, checked 7 November 2026. Full terms from Romano or the brand.

FEATURES

- Stainless steel double tub, steel cabinet
- Bypass kit included

DIMENSIONS

The dimension drawing and full specifications from Zenmo follow on the next page.

LD 1250

LAVASSA Double Laundry Tub & Cabinet

SPECIFICATIONS



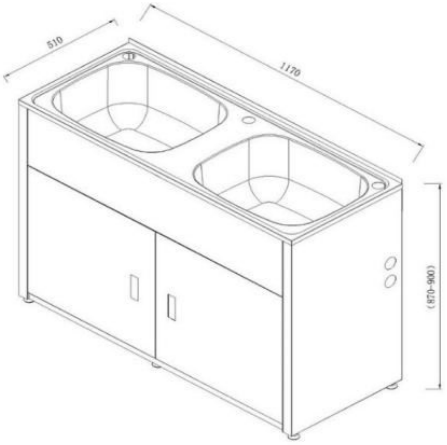

CLEANING & MAINTENANCE:

All Sinks should be cleaned with mild detergent and water

All Products must be cleaned with a soft cloth with soapy water, avoid waxes, solvents, abrasives, acids and other chemical based cleaners

Warranty will be void if damages are caused by unsuitable cleaning products

WARRANTY INFORMATION:

Metal Cabinet: **2 Years**

Laundry Stainless Steel Tub: **25 Years**

1 Year Replacement Warranty on Waste Plugs

All products (Excluding Waste Plugs) have a full 1 year in house labour warranty from date of purchase

ZENMO
Zen-inspired, Modern Living

ADDRESS: 42 Castro Way, Derrimut VIC 3026
PHONE: (03) 8390 6300
OFFICE: ect_sales@outlook.com
SERVICE: ect_service@outlook.com
WEBSITE: www.zenmo.com.au