ROMANO
Indoor & Outdoor Solutions

SPEC SHEET

PHOENIX / LAUNDRY TROUGH

Laundry Trough 50 Litre



RANGE
Laundry
TYPE
Laundry trough
BOWLS
Single
MATERIAL
Stainless steel
SIZES
610 x 510 mm
BOWL DEPTH
249 mm
TAP HOLES
Optional
FINISHES
Stainless Steel
CODE
314-0001-50

WARRANTY (DOMESTIC USE)

Sink structure (stainless steel sinks, laundry troughs): Lifetime / Parts and labour: 1 year

Conditions: installed by a licensed plumber; proof of purchase; no harsh cleaners. Summary of the Phoenix product warranty (from 1 March 2022), checked 7 November 2026. Full terms from Romano or the brand.

FEATURES

- 304 grade stainless steel, 0.8 mm
- 50 L, overmount only
- Basket waste included

DIMENSIONS

The dimension drawing and full specifications from Phoenix follow on the next page.

Romano Indoor & Outdoor Solutions, 4/126 Canterbury Rd, Kilsyth South VIC 3137. 03 9720 4633. sales@romanoios.com.au

1000 SERIES SINKS

LAUNDRY TROUGH 50 LITRE

SPECIFICATIONS

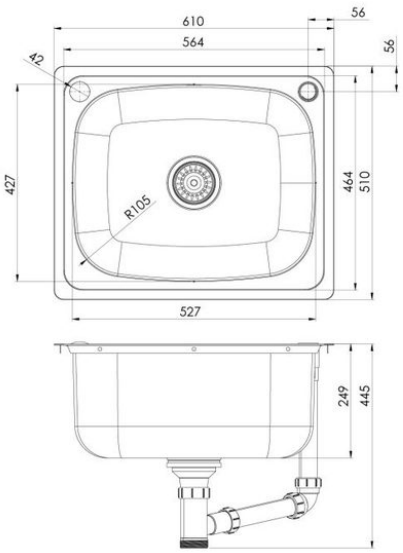



AVAILABLE IN

314-0001-50
Stainless Steel

INFORMATION

MAINTENANCE AND CARE:

— All surfaces should be cleaned with mild liquid detergent or soap and water.
— Do not use cream cleaners or citrus based cleaning products, as they are abrasive.
— Use of unsuitable cleaning agents may damage the surface.
— Any damage caused in this way will not be covered by warranty.

Please visit https://www.phoenixtapware.com.au/warranty to view the full warranty

PHOENIX

While we aim to ensure the specifications shown are correct at time of printing, Phoenix Tapware reserves the right to make modifications without prior notice. Always use the physical product measurements for mark-ups and roughing-in as the line drawing shown may differ from the actual product over time. All measurements are shown in millimetres. Colours may vary from image shown.

Ph: +61 3 9780 4200
07/11/2026
phoenixtapware.com.au