ROMANO
Indoor & Outdoor Solutions

SPEC SHEET

FIENZA / LAUNDRY TROUGH

Cleaners Sink



RANGE
Cleaners
TYPE
Laundry trough
BOWLS
Single
MATERIAL
Stainless steel
SIZES
555 x 455 x 220 mm
BOWL DEPTH
220 mm
TAP HOLES
None
FINISHES
Stainless Steel
CODE
68800

WARRANTY (DOMESTIC USE)

Stainless steel sinks (all), residential: 25 years replacement product, 1 year labour

Conditions: installed by a licensed tradesperson; proof of purchase; original owner. Summary of the Fienza warranty (from 1 September 2023), checked 7 November 2026. Full terms from Romano or the brand.

FEATURES

- Polished 304 stainless steel sink designed for commercial use
- Installs on floor legs, on wall brackets or into a benchtop
- No tap hole
- Sealing tape and mounting clips included
- Basket waste sold separately

DIMENSIONS

The dimension drawing and full specifications from Fienza follow on the next page.

fienza INSTALLATION GUIDE

Cleaners Sink Grate

68800-A

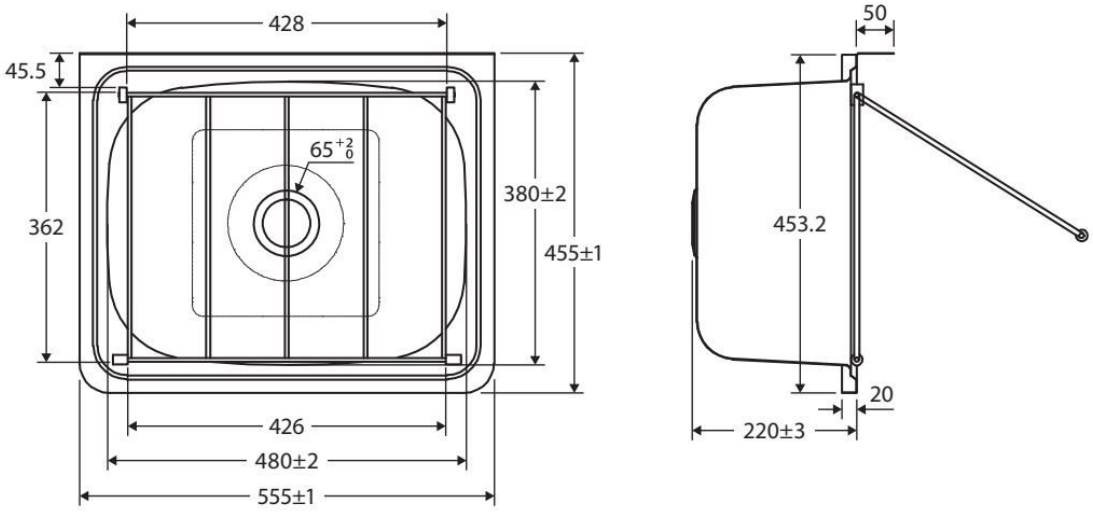

Installation

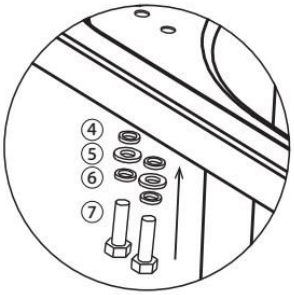

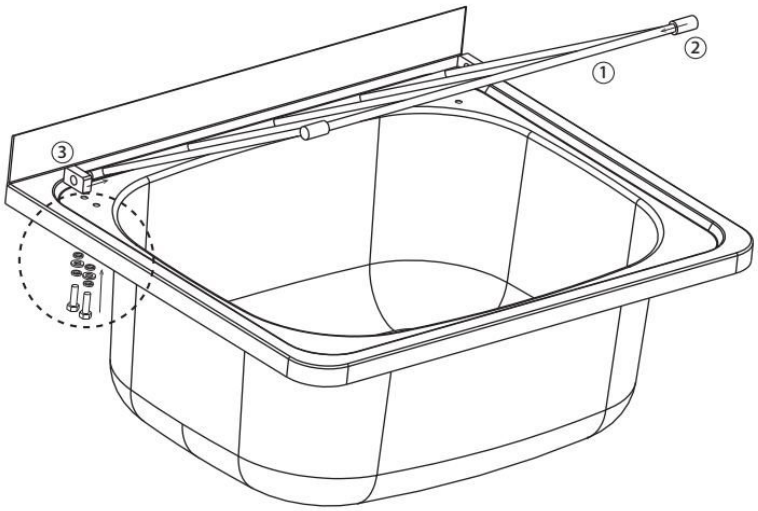

1	Grate
2	Foot Pad (x2)
3	Hinge Support (x2)
4	O-Ring, Black (x4)
5	Flat Washer (x4)
6	Spring Washer (x4)
7	Hexagon Bolt (x4)

IMPORTANT: All installations must be carried out by a licensed tradesperson in accordance with all applicable Building, Plumbing and Electrical codes, and Federal, State, or Local Government Regulations in accordance with AS/NZS 3500 Plumbing & Drainage, AS/NZS 6400:2016 Water Efficient Products, and AS/NZS 3000:2007 Electrical standards for any installations to which these standards apply.

Pages from Fienza's own specification. Ask us about this product, we're happy to help.
Romano Indoor & Outdoor Solutions, 4/126 Canterbury Rd, Kilsyth South VIC 3137. 03 9720 4633. sales@romanoios.com.au