ROMANO
Indoor & Outdoor Solutions

SPEC SHEET

METHVEN / SHOWER HEAD AND ARM

Aio Overhead Shower Aurajet



RANGE
Aio
TYPE
Shower head and arm
FINISHES
Chrome, Matte Black
CODE
AOOSCPAU / AOOSBKAU
WELS RATING
3 star
FLOW
9.0 litres a minute
MATERIAL
Brass

WARRANTY (DOMESTIC USE)

Showers: Lifetime of the original purchaser (replacement) / Matte black finish: 5 years / Accessories and spares: 10 years

Conditions: installed by a licensed plumber; proof of purchase; no harsh or abrasive cleaners. Summary of the Methven standard warranty (from April 2020), checked 7 November 2026. Full terms from Romano or the brand.

FEATURES

- Halo shaped single function showerhead
- Aurajet spray with 15 hidden jets
- Push-fit installation

DIMENSIONS

The dimension drawing and full specifications from Methven follow on the next page.

Care and Cleaning:

Run hot water through shower for 2 minutes before first use.

Never use abrasives or abrasive cleaning agents to clean this product. Clean regularly with contamination free warm soapy water and a damp soft cloth.

Clean filter washer located in the shower head waterway periodically. To access filter washer, push down on release button, hold the wall arm and pull shower head away from it.

Remove filter washer from the shower head waterway by gently levering out with a small screw driver.

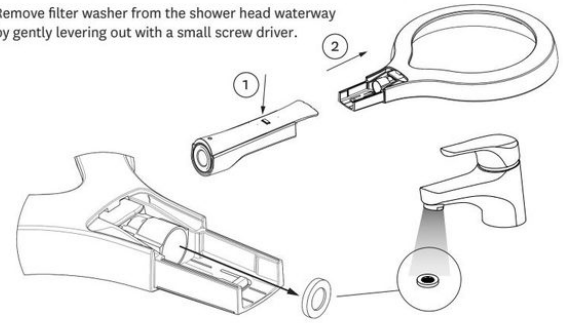

If shower performance is compromised by the build-up of lime-scale, soak in limescale remover for up to 10 minutes. Refer to instructions above for how to remove shower head from wall arm. Do not use products containing chlorine bleach or hydrochloric acid as these can damage the shower. Always rinse the shower thoroughly after cleaning to remove cleaning products that can damage the shower.

Never insert objects into the spray slot or attempt to remove limescale with sharp objects or abrasives.

Do not hang any items or pull down on the overhead shower. This may cause the overhead shower to deform.

Methven warrants this product against manufacturing defects and that it is suitable for use under the general operating conditions specified in this instruction sheet. However, regional regulations apply and may affect your warranty. Please refer to **www.methven.com** or call customer service for full details.

New Zealand	Australia	UK
0800 804 222	1300 638 483	0800 195 1602

439948 ISSUE

AURAJET™ OVERHEAD SHOWER
Installation Guide

Technical Specifications:

Operating Pressure:
Min: 100kPa/1bar
Max: 500kPa/5bar*
Optimum: 150kPa/1.5bar - 500kPa/5bar

Operating Temperature:
Hot: Max 70°C*
Cold: Min 5°C

Inlet Connections:
All ½" BSP

** Regional specific regulations apply. Please refer to your warranty statement at **www.methven.com***

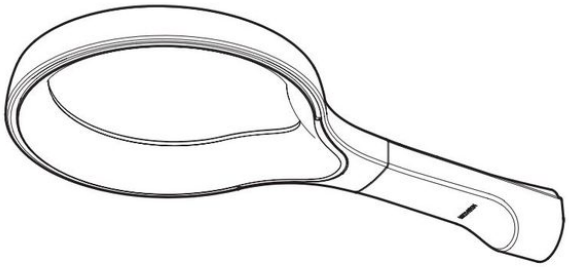

METHVEN
www.methven.com

IMPORTANT: Please read all of the instructions before installation.

General:

- Methven recommends this product is installed by a licensed plumber in compliance with all relevant regional regulations.
- After installation all connections must be checked for leaks.
- All outlets used primarily for personal hygiene shall deliver water at a safe temperature as per regional regulations.
- It is the responsibility of the installer to ensure a waterproof seal is achieved.
- NOTE: Some showers may not provide an effective shower when used with gravity fed heated water systems or where pressures are less than 150kPa/1.5bar at the outlet. Additionally showers with flow rates of less than 9L/min may not allow the following to function correctly:
  - some instantaneous water heaters
  - some tempering valves
  - some thermostatic mixing valves

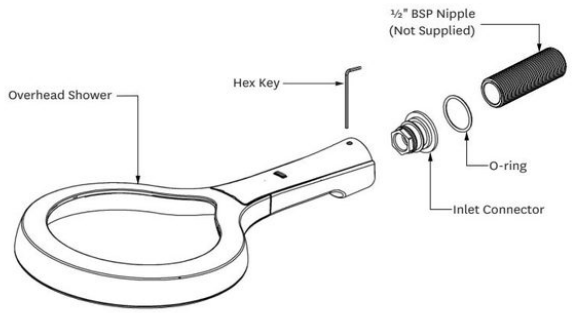

IMPORTANT: Before you begin, turn off the water supply.

Step 1

- Wall lining hole should be cut or finished as per the dimension shown in the diagram on the right.
- Cut off the threaded nipple 13±2mm from the wall lining and apply thread seal tape to ensure a good seal.

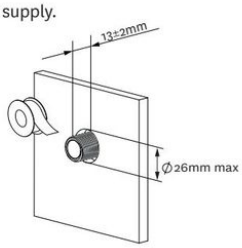

Step 2

- Ensure o-ring is located on the inlet connector.
- Screw the inlet connector onto the nipple ensuring that the o-ring is sufficiently compressed to create a watertight seal.

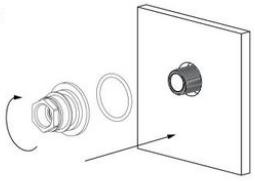

Step 3

- Push the overhead shower onto the inlet connector.
- Ensure that the overhead shower is oriented horizontally.
- Secure in place by tightening the grub screw firmly using the hex key provided.

