ROMANO
Indoor & Outdoor Solutions

SPEC SHEET

FIMA / HAND SHOWER

Park Lane Exposed Shower Set



RANGE
Park Lane
TYPE
Hand shower
FINISHES
Chrome
CODE
F1387
MATERIAL
Brass
MADE IN
Italy

WARRANTY (DOMESTIC USE)

Products and parts: 10 years replacement / Labour: 3 years / PVD finish: 10 years

Conditions: installed by a licensed plumber to national standards; proof of purchase, original owner; flow regulator and isolation tap fitted, pressure within limits. Summary of the Abey warranty for Fima (sold from 1 November 2025), checked 7 November 2026. Full terms from Romano or the brand.

FEATURES

- Handshower with antilimestone nozzles
- Wall holder with water connection
- 1500mm hose

DIMENSIONS

The dimension drawing and full specifications from Fima follow on the next page.

Romano Indoor & Outdoor Solutions, 4/126 Canterbury Rd, Kilsyth South VIC 3137. 03 9720 4633. sales@romanoios.com.au

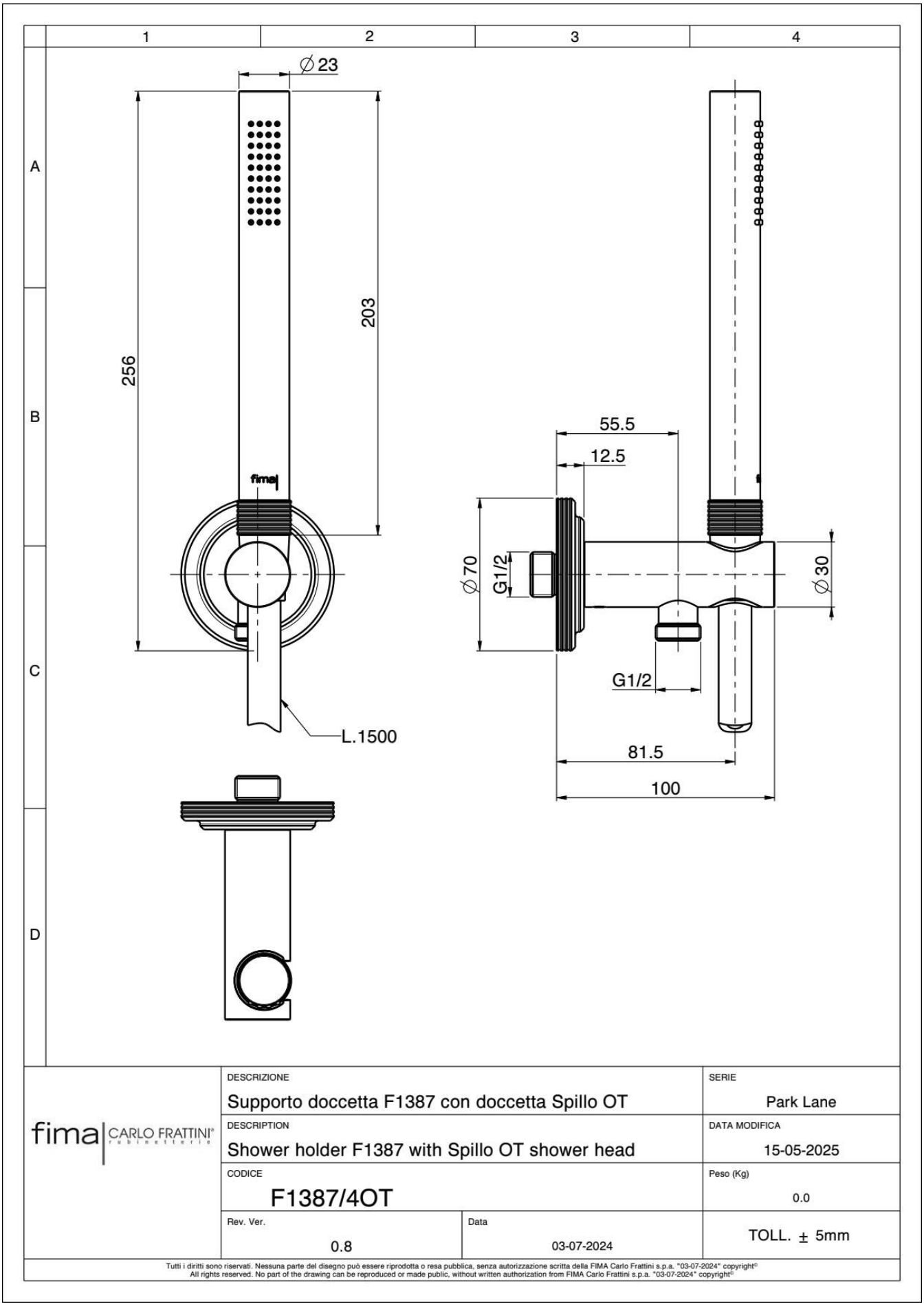

fima CARLO FRATTINI rubinetteria	DESCRIZIONE Supporto doccetta F1387 con doccetta Spillo OT	SERIE Park Lane
	DESCRIPTION Shower holder F1387 with Spillo OT shower head	DATA MODIFICA 15-05-2025
	CODICE F1387/4OT	Peso (Kg) 0.0
	Rev. Ver. 0.8 / Data 03-07-2024	TOLL. ± 5mm

Tutti i diritti sono riservati. Nessuna parte del disegno può essere riprodotta o resa pubblica, senza autorizzazione scritta della FIMA Carlo Frattini s.p.a. "03-07-2024" copyright©
All rights reserved. No part of the drawing can be reproduced or made public, without written authorization from FIMA Carlo Frattini s.p.a. "03-07-2024" copyright©