ROMANO
Indoor & Outdoor Solutions

SPEC SHEET

BRODWARE / SHOWER HEAD AND ARM

Neu England Shower Set



RANGE
Neu England
TYPE
Shower head and arm
FINISHES
Reclaimed Brass Organic, Ebonite Black PVD, Durobrite Chrome, Brushed Chrome, Polished Nickel PVD, Brushed Nickel PVD, Polished Swiss Brass PVD, Brushed Swiss Brass
CODE
1.8011.00.2.01
WELS RATING
3 star
FLOW
9.0 litres a minute
MATERIAL
Brass
MADE IN
Australia

WARRANTY (DOMESTIC USE)

Showers: 20 years: 5 years parts and labour, then 15 years parts / Shower hoses: 2 years

Conditions: warranty registration lodged with the receipt; installed by a Brodware accredited plumber; manufacturing defects, original owner. Summary of the Brodware extended warranty (from 1 March 2014), checked 7 November 2026. Full terms from Romano or the brand.

FEATURES

- Domed rose on a curved wall arm
- Cross handle wall tapware
- 200mm and 300mm roses available

DIMENSIONS

The dimension drawing and full specifications from Brodware follow on the next page.

Brodware

NEU ENGLAND SHOWER SET WITH CROSS HANDLES - CERAMIC DISC

1.8011.00.2.XX



PRODUCT DIMENSIONS:

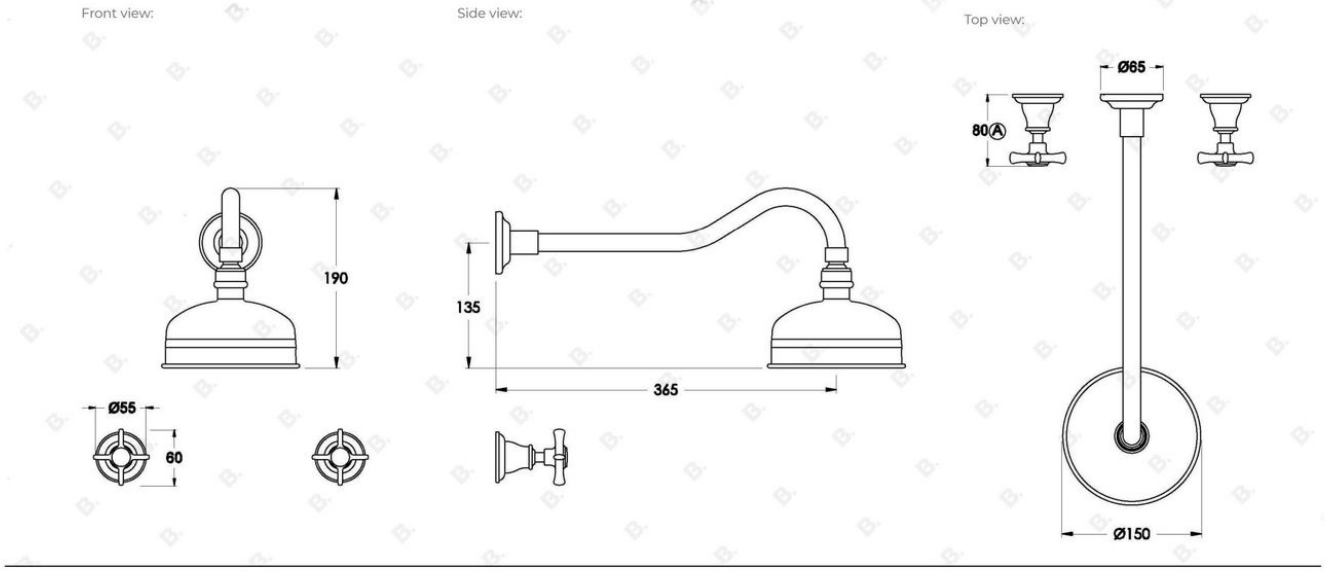

XX suffix indicated finish
Dimensions subject to change without notice
All dimensions are approximate
A Approximate distance
Copyright © Brodware 2020

B.