ROMANO
Indoor & Outdoor Solutions

SPEC SHEET

NERO / FILTER MIXER

Dolce Three-Way Kitchen Mixer



RANGE
Dolce
TYPE
Filter mixer
WATER
Filtered, Hot and cold
FINISHES
Chrome, Matte Black
CODE
NR250807GCH / NR250807GMB
WELS RATING
5 star
FLOW
6.0 litres a minute

WARRANTY (DOMESTIC USE)

Cartridge: 15 years, replacement cartridge only / Products or parts: 10 years replacement on all finishes / Parts and labour: 1 year replacement products or parts and labour

Conditions: installed by a licensed plumber; proof of purchase; residential use. Summary of the Nero warranty policy NWP2026.3 (sold after 1 May 2024), checked 7 November 2026. Full terms from Romano or the brand.

FEATURES

- Three-way kitchen mixer: hot, cold and filtered water from one tap
- Filter cartridge connects through a separate filtered water line
- Lead free DZR brass body
- WELS 5 star, 6 L/min

DIMENSIONS

The dimension drawing and full specifications from Nero follow on the next page.

Romano Indoor & Outdoor Solutions, 4/126 Canterbury Rd, Kilsyth South VIC 3137. 03 9720 4633. sales@romanoios.com.au

Dolce Three-Way Kitchen Mixer

Nero

Lead Free

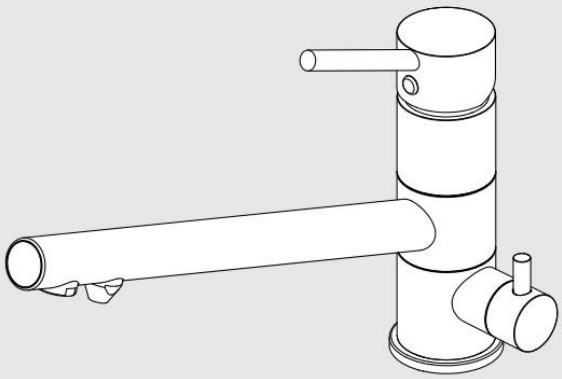

Versions:202506

Drawing

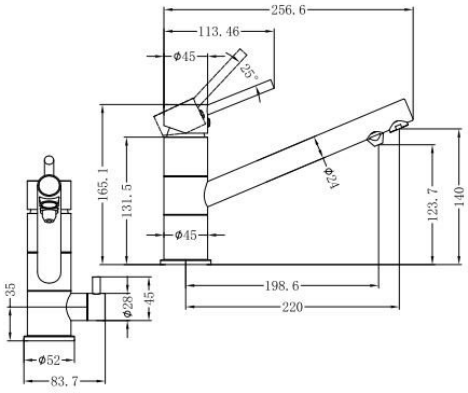

Specifications

Watermark License
WM-060073

Temperature Rating
Min 1°C-Max 75°C

Pressure Rating
Min 150kpa - Max 500kpa

Packaging Includes

1x Three-Way Kitchen Mixer
3x Flexible Hoses
1x Mounting Kit
1x Plate

Finish & SKU

Chrome
NR250807gCH

Matte Black
NR250807gMB

*Dimensions are nominal measurements only.

Installation Instruction

IMPORTANT: Read all instructions before installing.

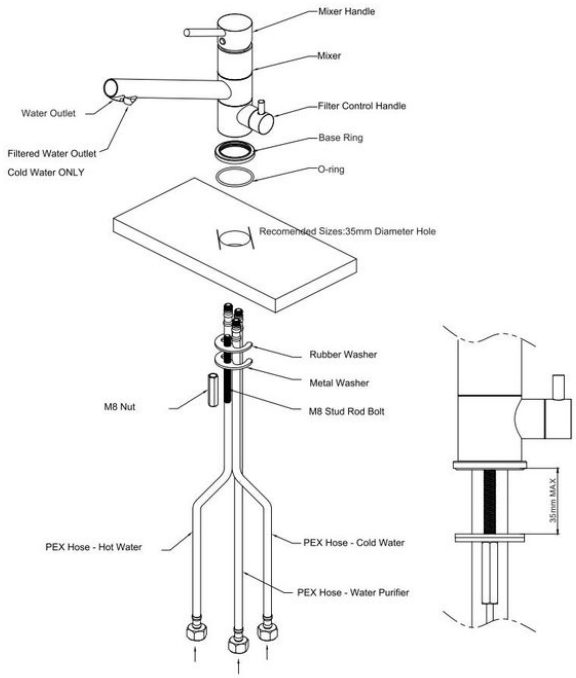

Safety and Compliance

Nero recommends this product is installed by a licensed plumber in compliance with all relevant regional regulations. The product must be installed in compliance with AS/NZS 3500.

Installation Guidance

Preparation

Ensure that the installation surface is ready, If there is no pre-drilled hole, drill a 35mm diameter hole in the desired location.

Assembling the Tap

1. Attach the Rubber Washer and Metal Washer onto the M8 Stud Rod Bolt.
2. Insert the above assembly through the base of the Mixer Body.
3. Slide the Base ring and the O-ring onto the base of the Mixer Body.
4. Insert the Mixer Body through the drilled hole in the installation surface.
5. Secure the Mixer Body from underneath the surface using the M8 Nut.Ensure it is tight and stable.

Connecting Water Supplies

1. Connect the Hot Water PEX Hose to the hot water supply line.
2. Connect the Cold Water PEX Hose to the cold water supply line.
3. Connect the Water Purifier PEX Hose to the water purifier unit.
4. Check all connections for tightness to prevent leaks.

Final Inspection and Testing

1. Turn on the water supply and inspect for any leaks at the connections.
2. Test the Mixer and Filter Control Handle to ensure proper functionality.

Maintenance

Regular maintenance is advised to maintain the efficiency and longevity of the product.

Pages from Nero's own specification. Ask us about this product, we're happy to help.
Romano Indoor & Outdoor Solutions, 4/126 Canterbury Rd, Kilsyth South VIC 3137. 03 9720 4633. sales@romanoios.com.au