ROMANO
Indoor & Outdoor Solutions

SPEC SHEET

REMER / MIRRORS AND SHAVING CABINETS

Sphere LED Mirror



RANGE
Sphere
TYPE
Mirror
SIZES
800 x 800, 600 x 600
FINISHES
Frameless, Milano White, Manhattan Black, Georgian Metal, Brits Nickel, Nordic Gold, Baltic Brass, Cuban Bronze
CODE
S80-CB / S80-NG / S60-NG / S60-CB / S80-MW / S80-MB / S80-GM / S80-BN
MATERIAL
Aluminium
MADE IN
Australia

WARRANTY (DOMESTIC USE)

Mirrors and shaving cabinets: 5 years replacement parts or products (domestic)

Conditions: Labour is not included, and door alignment on shaving cabinets is not included; Must be installed by a licensed electrician or tradesperson; proof of purchase may be required; Claims for warped, chipped or damaged products must be made within 48 hours of receipt. Summary of the Warranty Terms and Conditions | Remer, checked 7 November 2026. Full terms from Romano or the brand.

FEATURES

- Copper-free mirror
- LED lighting with adjustable colour temperature (2700K to 6500K)
- Touch sensor

DIMENSIONS

The dimension drawing and full specifications from Remer follow on the next page.

REMER

V2

BRACKET TYPE 1

Please check actual product in box for bracket type used

SPHERE 600

LED MIRROR

PRODUCT CODE

S60

SPECIFICATIONS	
WIDTH	600mm
HEIGHT	600mm
DEPTH	35mm
WEIGHT	9kg

FEATURES
Copper Free Mirror
LED Lighting (Adjustable Colour Temperature)
Backlit
Touch Sensor

LIGHTING SPECIFICATIONS	
CCT	2700K - 6500K
CRI	>80

INSTALLATION

Wall mount

Hardwire

Input voltage: 220-240v 50Hz

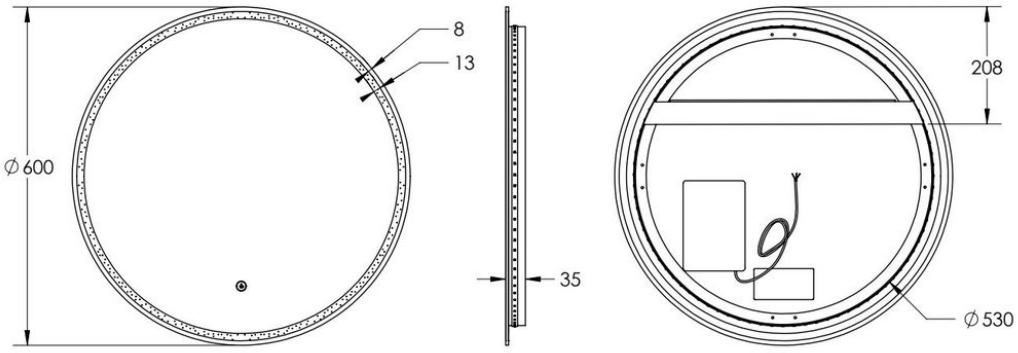

5 YEAR REPLACEMENT WARRANTY

Disclaimer: All LED Products requiring hardwiring must be installed by a licensed electrician in accordance with local regulations. Sizes are in mm and nominal and should be checked prior to installation. Actual colours may vary so please check colour samples before ordering. Installation is acceptance of our products. Installation of faulty, warped, chipped or damaged products will void our warranty.

13-15 Edison Road, Dandenong South VIC 3175
T (03) 9706 6663 E sales@remer.com.au W remer.com.au

REMER

REMER

BRACKET TYPE 2 V2

Please check actual product in box for bracket type used

SPHERE 600

LED MIRROR

PRODUCT CODE
S60

SPECIFICATIONS	
WIDTH	600mm
HEIGHT	600mm
DEPTH	35mm
WEIGHT	9kg

LIGHTING SPECIFICATIONS	
CCT	2700K - 6500K
CRI	>80

INSTALLATION
Wall Mount
Hardwire
Input Voltage: 220-240v 50Hz

FEATURES
Copper Free Mirror
LED Lighting (Adjustable Colour Temperature)
Touch Sensor

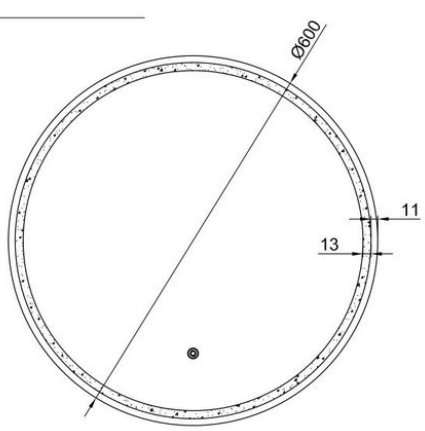

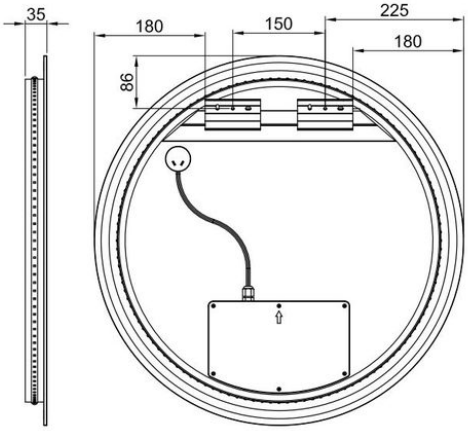

5 YEAR REPLACEMENT WARRANTY

Disclaimer: All LED Products requiring hardwiring must be installed by a licensed electrician in accordance with local regulations. Sizes are in mm and nominal and should be checked prior to installation. Actual colours may vary so please check colour samples before ordering. Installation is acceptance of our products. Installation of faulty, warped, chipped or damaged products will void our warranty.

13-15 Edison Road, Dandenong South VIC 3175
T (03) 9706 6663 E sales@remer.com.au W remer.com.au

REMER