ROMANO
Indoor & Outdoor Solutions

SPEC SHEET

REMER / MIRRORS AND SHAVING CABINETS

Modern Round Mirror



RANGE
Modern
TYPE
Mirror
SIZES
810 x 810, 610 x 610
FINISHES
Milano White, Manhattan Black, Georgian Metal, Brits Nickel, Nordic Gold, Baltic Brass, Cuban Bronze
CODE
MR81-NG / MR81-CB / MR61-NG / MR61-CB / MR81-MW / MR81-MB / MR81-GM / MR81-BN
MATERIAL
Aluminium
MADE IN
Australia

WARRANTY (DOMESTIC USE)

Mirrors and shaving cabinets: 5 years replacement parts or products (domestic)

Conditions: Labour is not included, and door alignment on shaving cabinets is not included; Must be installed by a licensed electrician or tradesperson; proof of purchase may be required; Claims for warped, chipped or damaged products must be made within 48 hours of receipt. Summary of the Warranty Terms and Conditions | Remer, checked 7 November 2026. Full terms from Romano or the brand.

FEATURES

- Coloured aluminium frame
- Copper-free mirror

DIMENSIONS

The dimension drawing and full specifications from Remer follow on the next page.

V1

REMER

MODERN ROUND 610

MIRROR

SPECIFICATIONS	
WIDTH	610mm
HEIGHT	610mm
DEPTH	40mm
WEIGHT	5kg

FEATURES
Copper Free Mirror
Coloured Aluminium Frame

FINISH	PRODUCT CODE
Baltic Brass	MR61-BB
Brits Nickel	MR61-BN
Cuban Bronze	MR61-CB
Georgian Metal	MR61-GM
Manhattan Black	MR61-MB
Milano White	MR61-MW
Nordic Gold	MR61-NG

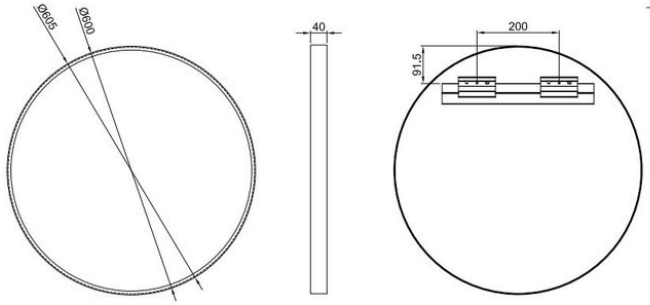

IP44

5 YEAR REPLACEMENT WARRANTY

Disclaimer: All LED Products requiring hardwiring must be installed by a licensed electrician in accordance with local regulations. Sizes are in mm and nominal and should be checked prior to installation. Actual colours may vary so please check colour samples before ordering. Installation is acceptance of our products. Installation of faulty, warped, chipped or damaged products will void our warranty.

13-15 Edison Road, Dandenong South VIC 3175
T (03) 9706 6663 E sales@remer.com.au W remer.com.au

REMER