ROMANO
Indoor & Outdoor Solutions

SPEC SHEET

RADIANT / HEATED TOWEL RAILS

Vail-650 Heated Single Square Bar with Rounded Ends



RANGE
VAIL
TYPE
Heated towel rail
SIZES
650 mm
BARS
1
POWER
15 watts
FINISHES
Mirror Polished, Brushed Gold
CODE
VAIL-650
MATERIAL
Stainless steel

WARRANTY (DOMESTIC USE)

Heated towel rail: 10 years, including construction and heating element / Non-heated towel rail: 10 years / Coloured and coated finishes: 2 years

Conditions: Must be installed and used per the supplied instructions and Australian Standards, by a licensed electrician or plumber where required; Not covered: incorrect installation, misuse, normal wear, harsh cleaners, coastal or high-humidity conditions; Claim with proof of purchase via claims@radiant.com.au or the place of purchase. Summary of the Radiant Australia Towel Rail Warranty (grates:

FEATURES

- Single square bar with rounded ends, 650 mm
- 15 W low voltage 12V, IP55 rated
- Mounts 80 mm from the wall
- Needs in-wall fixing bar and a 60 W low voltage controller

DIMENSIONS

The dimension drawing and full specifications from Radiant follow on the next page.

towel rails timers underfloor heating floor grates ThermaNiche ThermaSheet demisters
Radiant Australia Pty Ltd Unit 1 / 18 Profit Pass, Wangara, WA 6065
t: 08 9302 4140 f: 08 8490 2343 e: orders@radiant.com.au

radiant AUSTRALIA



SINGLE HEATED + NON-HEATED

VAIL – 650 / 800

MIRROR POLISHED AND BRUSHED SATIN MANUFACTURED FROM 304 GRADE STAINLESS STEEL

COLOURED FINISHES MANUFACTURED FROM 201 GRADE STAINLESS STEEL

IP55 RATED

10 YEAR WARRANTY FOR CONSTRUCTION / HEATING ELEMENT

COATING ON COLOURED RAILS ARE COVERED BY A 2 YEAR WARRANTY

If **heating** the single towel rails you will need to purchase the items below:

CODE	SPECIFICATIONS
TTR300	70/105 watt transformer for up to 4 rails (not required if installing as non-heated)
SB-FIX	Single bar fixing rail (not required if installing as non-heated) for up to 4 rails

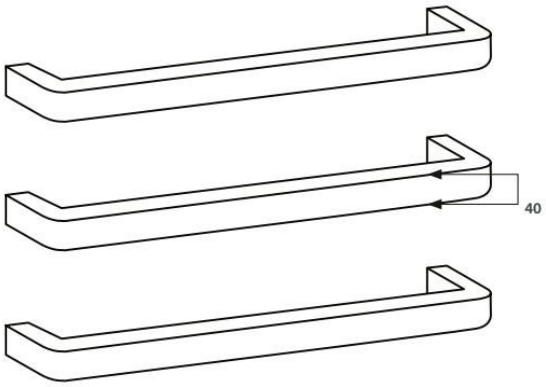

FEATURES

- Single square bar with rounded ends / 12V
- Can be used as heated and non-heated
- Available in various widths: 650, 800
- Distance from the wall: 80 mm
- Width between fixing holes: (650) = 630mm (800) = 780mm

Please note: Due to manufacturing constraints beyond our control, our coloured towel rails may have minor colour variances in different batches, so may be slightly different to the images and colour samples you may have seen.

CODE	WATT	SIZE (MM)	FINISH
Vail-650	15W	80x650	Polished
Vail-800	18W	80x800	Polished
GMG-Vail-650	12W	80x650	Gun Metal Grey
GMG-Vail-800	15W	80x800	Gun Metal Grey
BRU-VAIL-650	12W	80x650	Brushed Satin
BRU-VAIL-800	15W	80x800	Brushed Satin
BLK-VAIL-650	20W	80x650	Matt Black
BLK-VAIL-800	22W	80x800	Matt Black
GLD-VAIL-650	15W	80x650	Brushed Gold

PLEASE NOTE: NOT ALL PRODUCTS ARE AVAILABLE IN ALL FINISHES. IF NOT LISTED IN THE SPECIFICATIONS IT IS NOT CURRENTLY AVAILABLE.