ROMANO
Indoor & Outdoor Solutions

SPEC SHEET

PHOENIX / SHELVES, SOAP AND TUMBLERS

Nuage Soap Dish



RANGE
Nuage
TYPE
Soap holder
FINISHES
Chrome, Brushed Nickel, Matte White, Brushed Carbon
CODE
129-8300-00
MATERIAL
Brass

WARRANTY (DOMESTIC USE)

Accessories (product or parts): 7 years / Finish (non-chrome finishes): 7 years / Chrome finish: Covered under the standard product or parts warranty

Conditions: installed by a licensed plumber; proof of purchase; no harsh cleaners. Summary of the Phoenix product warranty (from 1 March 2022), checked 7 November 2026. Full terms from Romano or the brand.

FEATURES

- Twin screw mounting plate for a stable installation
- Comes in 4 finishes

DIMENSIONS

The dimension drawing and full specifications from Phoenix follow on the next page.

Romano Indoor & Outdoor Solutions, 4/126 Canterbury Rd, Kilsyth South VIC 3137. 03 9720 4633. sales@romanoios.com.au

NUAGE

NUAGE SOAP DISH

SPECIFICATIONS

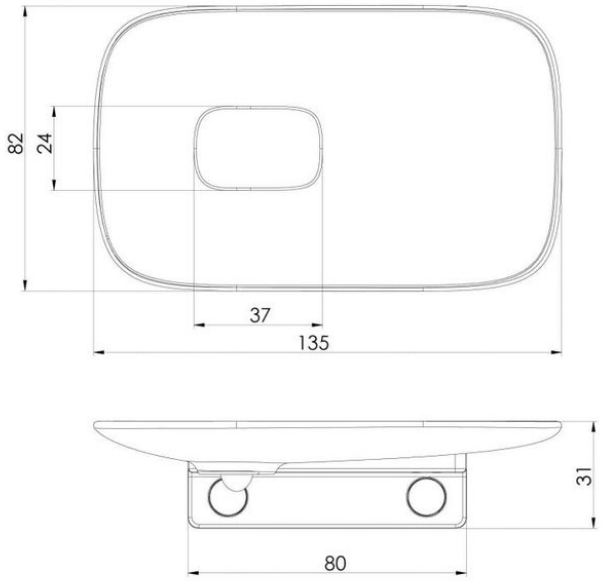



AVAILABLE IN


129-8300-00
Chrome


129-8300-40
Brushed Nickel


129-8300-31
Brushed Carbon

129-8300-80
Matte White

INFORMATION



MAINTENANCE AND CARE:

— All surfaces should be cleaned with mild liquid detergent or soap and water.
— Do not use cream cleaners or citrus based cleaning products, as they are abrasive.
— Use of unsuitable cleaning agents may damage the surface.
— Any damage caused in this way will not be covered by warranty.

Please visit https://www.phoenixtapware.com.au/warranty to view the full warranty

PHOENIX

While we aim to ensure the specifications shown are correct at time of printing, Phoenix Tapware reserves the right to make modifications without prior notice. Always use the physical product measurements for mark-ups and roughing-in as the line drawing shown may differ from the actual product over time. All measurements are shown in millimetres. Colours may vary from image shown.

Ph: +61 3 9780 4200
07/11/2026
phoenixtapware.com.au