ROMANO
Indoor & Outdoor Solutions

SPEC SHEET

PHOENIX / HEATED TOWEL RAILS

Five Flat Bar Heated Towel Ladder



RANGE
Phoenix
TYPE
Heated towel rail
SIZES
550 x 740 mm
BARS
5
POWER
35 watts
CONNECTION
Either
FINISHES
Chrome, Matte Black, Brushed Nickel, Brushed Gold, Brushed Carbon
CODE
652-8750-00

WARRANTY (DOMESTIC USE)

Heated towel rail and ladder (product or parts): 7 years / Finish (non-chrome finishes): 7 years

Conditions: installed by a licensed plumber; proof of purchase; no harsh cleaners. Summary of the Phoenix product warranty (from 1 March 2022), checked 7 November 2026. Full terms from Romano or the brand.

FEATURES

- Rated 240V, 50Hz, 35W
- IPX4 rated , suitable for bathroom installations
- Can be hardwired or plugged in
- Cable exits through bottom right vertical tube
- Comes in 5 finishes

DIMENSIONS

The dimension drawing and full specifications from Phoenix follow on the next page.

Romano Indoor & Outdoor Solutions, 4/126 Canterbury Rd, Kilsyth South VIC 3137. 03 9720 4633. sales@romanoios.com.au

DESIGNER RAILS & LADDERS

FIVE FLAT BAR HEATED TOWEL LADDER 550MM X 740MM

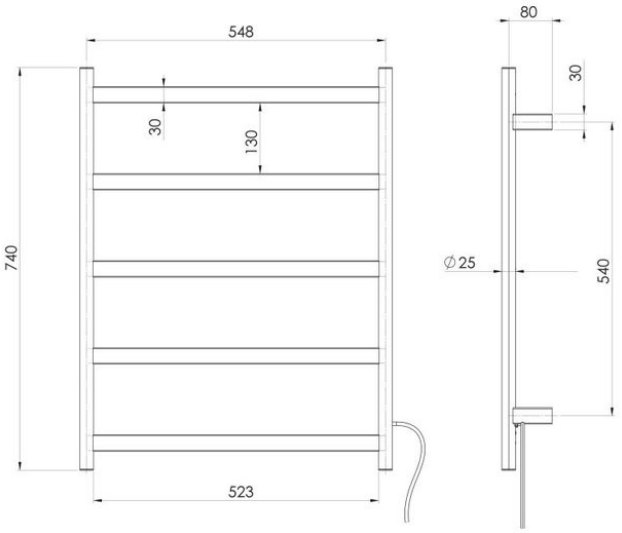

Electricity Input: 240V, 50Hz | Power Rating: 35W | IP Rating: IPX4 | Connection position: Bottom right | Connection type: Plug-in or Hardwire

SPECIFICATIONS



AVAILABLE IN



652-8750-00	652-8750-40	652-8750-31	652-8750-10	652-8750-12
Chrome	Brushed Nickel	Brushed Carbon	Matte Black	Brushed Gold

INFORMATION



MAINTENANCE AND CARE:

- All surfaces should be cleaned with mild liquid detergent or soap and water.
- Do not use cream cleaners or citrus based cleaning products, as they are abrasive.
- Use of unsuitable cleaning agents may damage the surface.
- Any damage caused in this way will not be covered by warranty.

Please visit https://www.phoenixtapware.com.au/warranty to view the full warranty

PHOENIX

While we aim to ensure the specifications shown are correct at time of printing, Phoenix Tapware reserves the right to make modifications without prior notice. Always use the physical product measurements for mark-ups and roughing-in as the line drawing shown may differ from the actual product over time. All measurements are shown in millimetres. Colours may vary from image shown.

Ph: +61 3 9780 4200
07/11/2026
phoenixtapware.com.au