ROMANO
Indoor & Outdoor Solutions

SPEC SHEET

NERO / FLOOR GRATES AND DRAINS

Tile Insert V Channel Floor Grate



RANGE
Other
TYPE
Floor grate or shower drain
SIZES
900 x 106 mm, 80 mm outlet
FINISHES
Matte Black, Brushed Gold, Brushed Nickel, Brushed Bronze, Gunmetal
CODE
NRFG003hsMB / NRFG003hsBG / NRFG003hsBN / NRFG003hsBZ / NRFG003hsGM
MATERIAL
Stainless steel

WARRANTY (DOMESTIC USE)

Floor wastes and universal pop-up wastes: 10 years, replacement only

Conditions: installed by a licensed plumber; proof of purchase; residential use. Summary of the Nero warranty policy NWP2026.3 (sold after 1 May 2024), checked 7 November 2026. Full terms from Romano or the brand.

FEATURES

- Made from 304 stainless steel
- Comes in 5 finishes

DIMENSIONS

The dimension drawing and full specifications from Nero follow on the next page.

Tile Insert V Channel 900x106mm Floor Grate 80mm Outlet

Nero

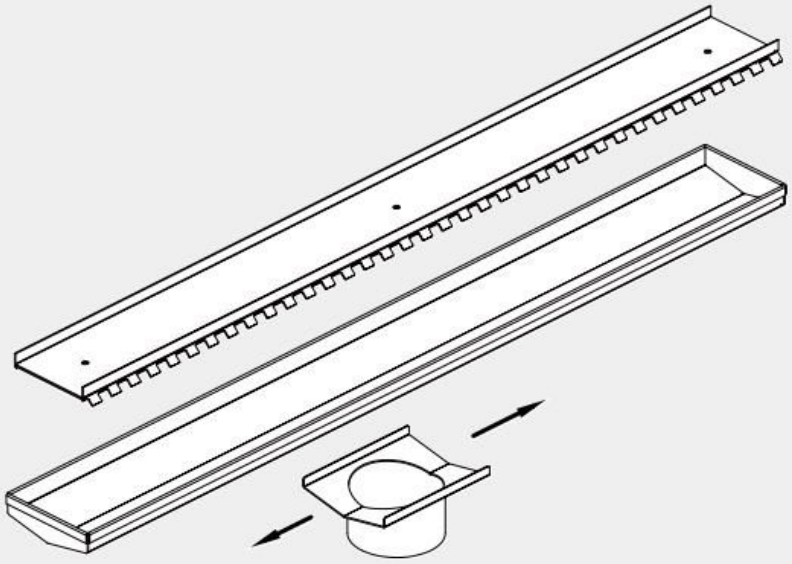

Version : 202510

Drawing

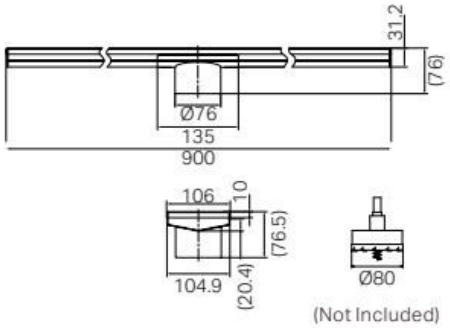

Specifications

Watermark License
WM-032203

Group Items

1x Floor Grate
1x 80mm Outlet

Finish & SKU

- **Chrome** NRFG003HSBN
- **Gun Metal** NRFG003HSGM
- **Brushed Bronze** NRFG003HSBZ
- **Matte Black** NRFG003HSMB
- **Brushed Gold** NRFG003HSBG

NOTE:
1. Suitable for 80mm DWV outlet.
2. Hole saw is not included, It can be purchased separately. Code is NR003HS.

*Dimensions are nominal measurements only

INSTALLATION INSTRUCTIONS

GENERAL INSTRUCTIONS:

- This product must be installed by a licensed plumber. Ensure that your plumbing installation complies with the Australian/New Zealand Standard AS/NZS 3500.
- Do not pour concrete around floor grate. Use timber formwork and install the grate only after concrete has fully cured.
- Apply a waterproof membrane compliant with AS 3740 between the substrate and finished tile surface before laying tiles.

Pages from Nero's own specification. Ask us about this product, we're happy to help.

Romano Indoor & Outdoor Solutions, 4/126 Canterbury Rd, Kilsyth South VIC 3137. 03 9720 4633. sales@romanoios.com.au