ROMANO
Indoor & Outdoor Solutions

SPEC SHEET

NERO / BASIN WASTES

Project Pop Up Waste



RANGE
Other
TYPE
Basin waste
FINISHES
Chrome, Matte Black, Brushed Gold, Brushed Nickel, Gunmetal
CODE
NRA711CH / NRA711MB / NRA711BG / NRA711BN / NRA711GM
MATERIAL
Brass

WARRANTY (DOMESTIC USE)

Floor wastes and universal pop-up wastes: 10 years, replacement only

Conditions: installed by a licensed plumber; proof of purchase; residential use. Summary of the Nero warranty policy NWP2026.3 (sold after 1 May 2024), checked 7 November 2026. Full terms from Romano or the brand.

FEATURES

- Pop up basin waste
- Made from brass
- Comes in 5 finishes

DIMENSIONS

The dimension drawing and full specifications from Nero follow on the next page.

Romano Indoor & Outdoor Solutions, 4/126 Canterbury Rd, Kilsyth South VIC 3137. 03 9720 4633. sales@romanoios.com.au

Project Pop-up Waste

Nero

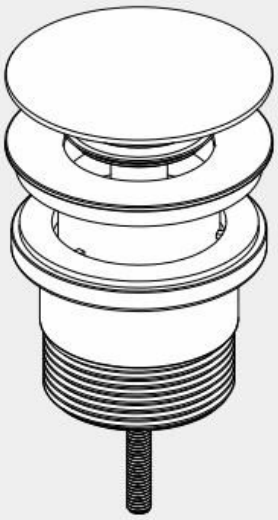

Version : 202509

Drawing

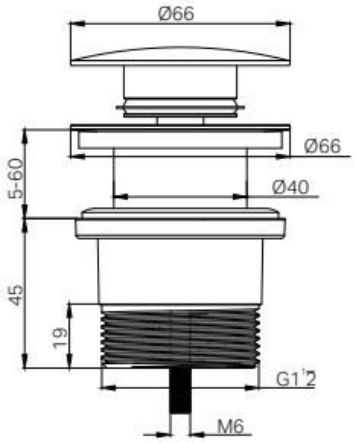

Features

SKU
NRA711

Watermark License
WMK26021

Packing Includes

1x Pop-up Waste

Finish & SKU

- **Chrome** NRA711CH
- **Gun Metal** NRA711GM
- **Brushed Nickel** NRA711BN
- **Matte Black** NRA711MB
- **Brushed Gold** NRA711BG

*Dimensions are nominal measurements only.

INSTALLATION INSTRUCTIONS

GENERAL INSTRUCTIONS:
The Nero Pop-up Waste (Model NRA711) is designed to suit basins with a 40 mm waste outlet. Installation should be carried out by a licensed plumber and in accordance with Australian standards.

MAINTENANCE AND CARE:
-Clean the basket waste with a soft, damp cloth. Avoid using abrasive cleaners, which can damage the finish.
- Regularly remove and clean the strainer to prevent blockages.
- Keep the drain dry when not in use to prevent corrosion.

PART NAMES

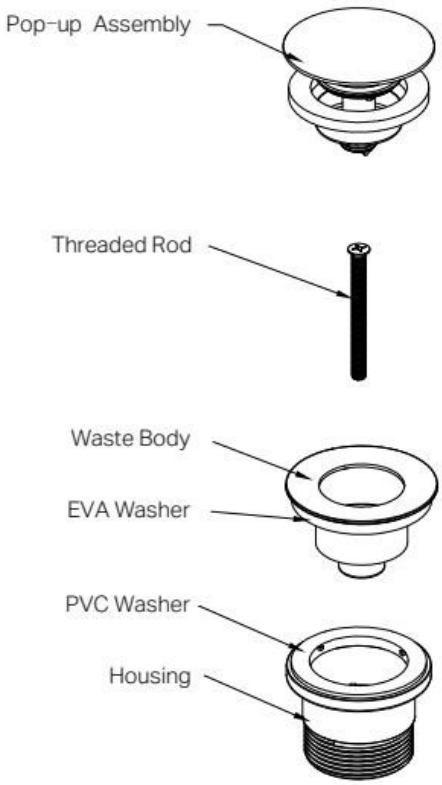

Pages from Nero's own specification. Ask us about this product, we're happy to help.
Romano Indoor & Outdoor Solutions, 4/126 Canterbury Rd, Kilsyth South VIC 3137. 03 9720 4633. sales@romanoios.com.au