ROMANO
Indoor & Outdoor Solutions

SPEC SHEET

NERO / TOWEL RAILS AND RINGS

Non-Heated Towel Ladder



RANGE
Mecca
TYPE
Towel rail
FINISHES
Chrome, Matte Black, Brushed Gold, Brushed Nickel, Brushed Bronze, Gunmetal, Graphite, Matte White
CODE
NR190001CH / NR190001MB / NR190001BG / NR190001BN / NR190001BZ / NR190001GM / NR190001GR / NR190001MW
MATERIAL
Stainless steel

WARRANTY (DOMESTIC USE)

Bathroom accessories: Zen, Opal, York, Bianca, Mecca (home use): 25 years, replacement products or parts on all finishes

Conditions: installed by a licensed plumber; proof of purchase; residential use. Summary of the Nero warranty policy NWP2026.3 (sold after 1 May 2024), checked 7 November 2026. Full terms from Romano or the brand.

FEATURES

- Wall mounted ladder with seven bars
- Made from 304 stainless steel
- Comes in 8 finishes

DIMENSIONS

The dimension drawing and full specifications from Nero follow on the next page.

Non-Heated Towel Ladder

Nero

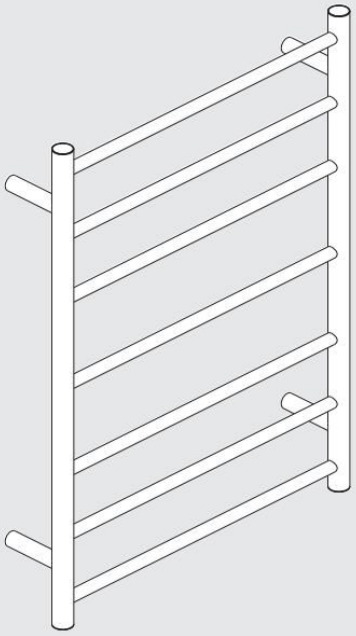

Versions:202506

Drawing

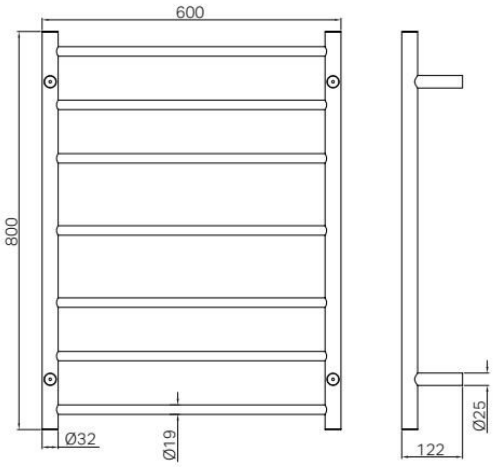

Features

- 7 round bars non-heated towel rail
- 304 grade stainless steel
- 600mm (W) x 800mm (H)
- 120mm from the wall

Packaging Includes

1x Towel Ladder
1x Installation Kits

Finish & SKU

Chrome NR190001CH	Gun Metal NR190001GM	Brushed Bronze NR190001BZ	Graphite NR190001GR
Matte Black NR190001MB	Brushed Gold NR190001BG	Matte White NR190001MW	Brushed Nickel NR190001BN

*Dimensions are nominal measurements only.

Installation Instruction

GENERAL INSTRUCTIONS AND WARNINGS

- Before installation, make sure the wall surface is clean and dry to ensure a secure attachment.
- When tightening screws, do not apply excessive force to prevent damage to the wall or the fixtures.
- Use the correct tools: a drill with a 6mm bit, screwdriver, and level.
- Wear appropriate safety gear, such as gloves and safety glasses, to protect yourself during installation.
- Before drilling, check the wall for any hidden pipes or electrical wires to avoid accidental damage.
- Ensure all measurements are accurate before drilling holes to prevent misalignment of the accessories.

MAINTENANCE AND CARE

- Clean the accessories with a soft, damp cloth. Avoid using abrasive cleaners, which can damage the finish.

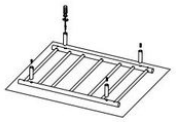

1. Position the towel ladder on a secure, flat surface to avoid damage.
Attach the four legs by tightening the screws with a screwdriver.

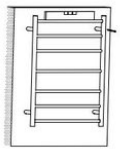

2. Hold the towel ladder against the wall, using a level to ensure it is horizontal.
Mark the wall directly beneath each leg position with a marking pen.



3. Align the fixing brackets at the marked points and mark drilling points through the bracket holes.

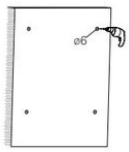

4. Use an electric drill with a 6mm drill bit to drill holes at the marked points.

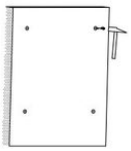

5. Insert the expansion plugs into the drilled holes using a hammer.

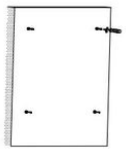

6. Place the fixing bracket covers over the expansion plugs and fasten them securely.



7. Mount the towel ladder onto the brackets.
Tighten the grub screws into the legs to secure the ladder firmly against the mounting brackets.

Pages from Nero's own specification. Ask us about this product, we're happy to help.
Romano Indoor & Outdoor Solutions, 4/126 Canterbury Rd, Kilsyth South VIC 3137. 03 9720 4633. sales@romanoios.com.au