ROMANO
Indoor & Outdoor Solutions

SPEC SHEET

NERO / ROBE HOOKS

Bianca Robe Hook



RANGE
Bianca
TYPE
Robe hook
FINISHES
Chrome, Matte Black, Brushed Gold, Brushed Nickel, Brushed Bronze, Gunmetal
CODE
NR9082CH / NR9082MB / NR9082BG / NR9082BN / NR9082BZ / NR9082GM
MATERIAL
Stainless steel

WARRANTY (DOMESTIC USE)

Bathroom accessories: Zen, Opal, York, Bianca, Mecca (home use): 25 years, replacement products or parts on all finishes

Conditions: installed by a licensed plumber; proof of purchase; residential use. Summary of the Nero warranty policy NWP2026.3 (sold after 1 May 2024), checked 7 November 2026. Full terms from Romano or the brand.

FEATURES

- Made from 304 stainless steel
- Comes in 6 finishes

DIMENSIONS

The dimension drawing and full specifications from Nero follow on the next page.

Romano Indoor & Outdoor Solutions, 4/126 Canterbury Rd, Kilsyth South VIC 3137. 03 9720 4633. sales@romanoios.com.au

Nero

Bianca Bathroom Accessories

Versions:202506

Finish

- Chrome
- Gun Metal
- Brushed Nickel
- Matte Black
- Brushed Gold
- Brushed Bronze

Bianca Bathroom Accessories

ROBE HOOK
NR9082CH / NR9082MB / NR9082BN
NR9082GM / NR9082BG / NR9082BZ

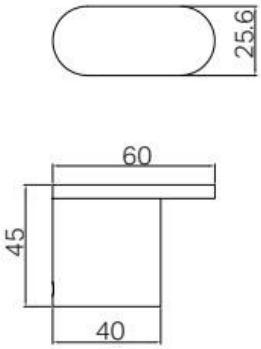

SINGLE TOWEL RAIL 600MM
NR9024CH / NR9024MB / NR9024BN
NR9024GM / NR9024BG / NR9024BZ

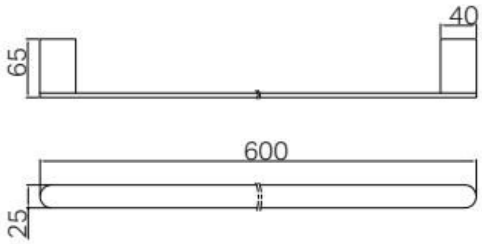

TOILET ROLL HOLDER
NR9086CH / NR9086MB / NR9086BN
NR9086GM / NR9086BG / NR9086BZ

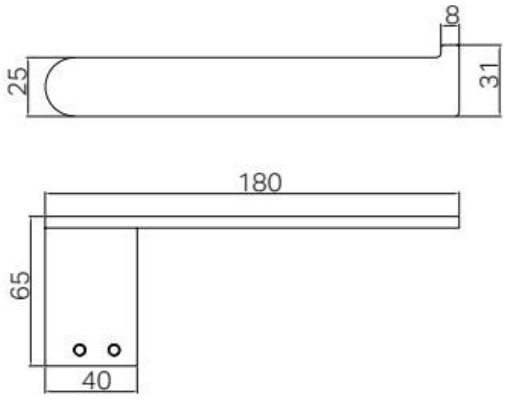

DOUBLE TOWELRAIL600MM
NR9024dCH / NR9024dMB / NR9024dBN
NR9024dGM / NR9024dBG / NR9024dBZ

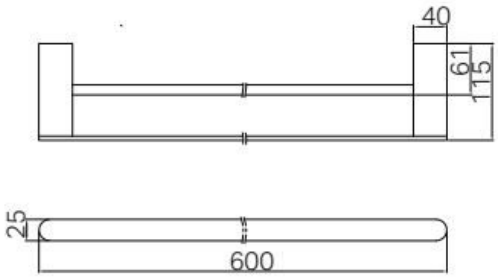

TOILET ROLL HOLDER WITH PHONE HOLDER
NR9086aCH / NR9086aMB / NR9086aBN
NR9086aGM / NR9086aBG / NR9086aBZ

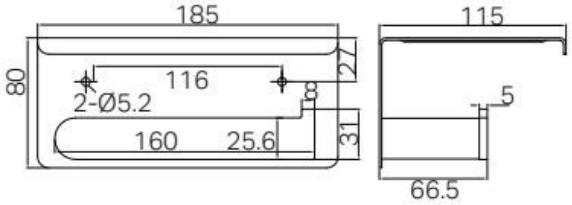

SINGLE TOWEL RAIL 800MM
NR9030CH / NR9030MB / NR9030BN
NR9030GM / NR9030BG / NR9030BZ

