ROMANO
Indoor & Outdoor Solutions

SPEC SHEET

BELLA VISTA / TOILET ROLL AND BRUSH HOLDERS

Mica Heritage Toilet Paper Holder



RANGE
Mica Heritage
TYPE
Toilet roll holder
FINISHES
Chrome, Matte Black, Brushed Nickel, French Gold, Dusk Bronze
CODE
1711-CP / 1711-BLK / 1711-BN / 1711-FG / 1711-DB
MATERIAL
Brass

WARRANTY (DOMESTIC USE)

Mica accessories (no labour): Lifetime parts or replacement product / Mica accessories finish: Lifetime guarantee on colour / Supra and Milos accessories finish: Lifetime guarantee on colour, no labour included

Conditions: installed by a licensed plumber with a compliance certificate; proof of purchase; excludes wear parts and chemical damage. Summary of the Bella Vista Product Guarantee (from 1 June 2026), checked 7 November 2026. Full terms from Romano or the brand.

DIMENSIONS

The dimension drawing and full specifications from Bella Vista follow on the next page.

Romano Indoor & Outdoor Solutions, 4/126 Canterbury Rd, Kilsyth South VIC 3137. 03 9720 4633. sales@romanoios.com.au

BELLAVISTA®

Mica Heritage Toilet Paper Holder

Product Code: 1711

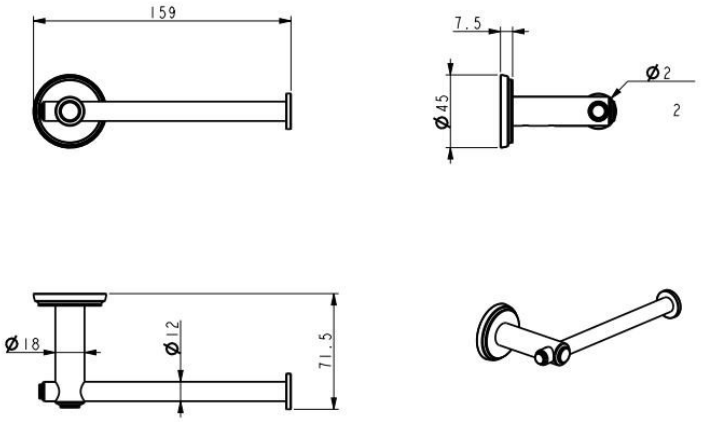



FEATURES

- Stainless Steel

FINISHES AVAILABLE

Chrome | Matt Black | Brushed Nickel | French Gold | Dusk Bronze

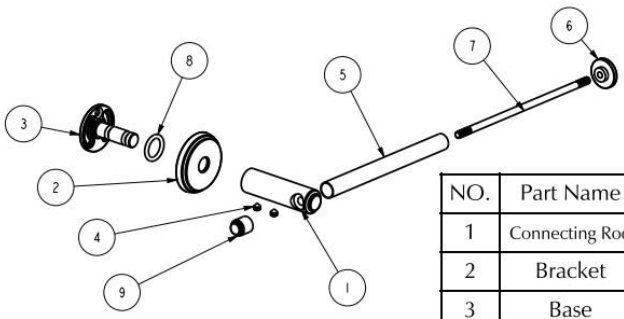

NO.	Part Name	Qty
1	Connecting Rod	1
2	Bracket	1
3	Base	1
4	Grub Screw	2
5	Roller Bar	1
6	End Cap	1
7	Stud	1
8	O-Ring	1
9	Decorative Cap	1

CARE & MAINTAINANCE

- Please inspect product for any defects prior to installation.
- Clean using a mild detergent and warm water, rinse and dry with a soft cloth.
- Do not use harsh detergents, citrus based cleaners, or abrasive cleaners on this product.
- Any form of tools will damage this product, do not apply directly to product.
- Do not use acid based cleaning products on this product.
- Refer to the installation manual for correct installation.

Proudly designed by Bella Vista in Australia

www.bella-vista.au Email: sales@bella-vista.net.au

For product manual, warranty or terms and conditions, Please visit our website.

Thank you for choosing Bella-visa.