ROMANO
Indoor & Outdoor Solutions

SPEC SHEET

ZENMO / WALL HUNG BASIN

Vola Wall Hung Basin (With Brackets)



RANGE
Vola
TYPE
Wall hung basin
SHAPE
Rectangle
MATERIAL
Ceramic
SIZE
560 x 440 x 525 mm
TAP HOLE
One
OVERFLOW
Yes
COLOURS
Gloss White
CODE
WB 5446W / WB Shroud-II 5446W

WARRANTY (DOMESTIC USE)

Ceramic basin: 15 years replacement / Labour: 1 year / Plug and waste: 1 year

Conditions: installed by a licensed plumber, receipt of purchase; original purchaser, faulty materials or workmanship; domestic use. Summary of the Zenmo (ECT Global) toilet suite warranty, from 1 January 2021, checked 7 November 2026. Full terms from Romano or the brand.

FEATURES

- Wall hung basin with a matching shroud that hides the waste pipe
- Designed for accessible bathrooms (AS 1428.1)
- Height 525 mm is the basin and shroud together
- Photo shows a tap with the basin

DIMENSIONS

The dimension drawing and full specifications from Zenmo follow on the next page.

ZENMO

SPECIFICATIONS

WB 5446W, WB SHROUD-5446W

VOLA wall hung basin.

PRODUCT



WIDTH	DEPTH
560mm	430mm
HEIGHT	**CAPACITY**
400mm	6.5L

DIMENSIONS, MM

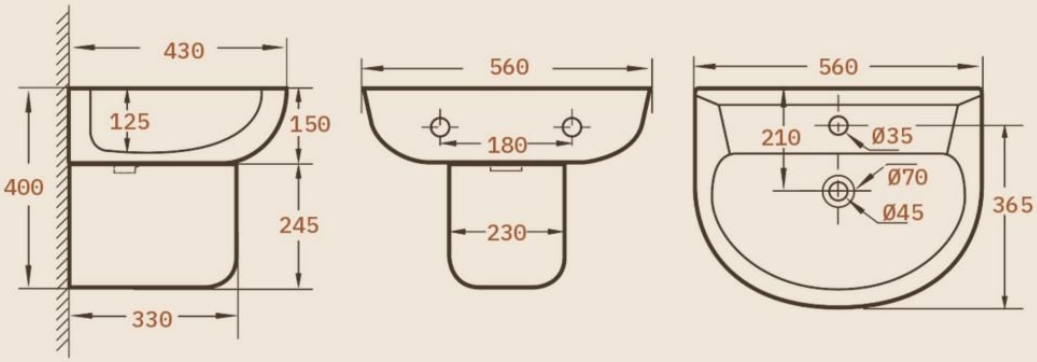

DETAILS

Material: vitreous china
Finish: gloss white
Weight: 18kg
Tap holes: 1 or none

FITTING

180mm between the 2 basin fixing holes
190mm between the 2 shroud fixing holes
45mm from the top of the shroud to the holes
Waste: 32mm with overflow, not included
Can be installed to comply with AS1428.1

WARRANTY

15 years replacement warranty on ceramic.
1 year in-house labour from the date of purchase.

CLEANING AND MAINTENANCE

Clean with mild detergent and water on a soft cloth. Avoid waxes, solvents, abrasives, acids and other chemical-based cleaners.
The warranty is void if damage is caused by unsuitable cleaning products.

ADDRESS
42 Castro Way, Derrimut VIC 3026

PHONE
(03) 8390 6300

EMAIL
sales@zenmo.com.au

WEBSITE
www.zenmo.com.au