ROMANO
Indoor & Outdoor Solutions

SPEC SHEET

ZENMO / ABOVE COUNTER BASIN

Lunar Above Counter Basin



RANGE
Lunar
TYPE
Above counter basin
SHAPE
Round
MATERIAL
Ceramic
SIZE
445 x 445 x 125 mm
OVERFLOW
No
COLOURS
Matte White
CODE
WB 4012M

WARRANTY (DOMESTIC USE)

Ceramic basin: 15 years replacement / Labour: 1 year / Plug and waste: 1 year

Conditions: installed by a licensed plumber, receipt of purchase; original purchaser, faulty materials or workmanship; domestic use. Summary of the Zenmo (ECT Global) toilet suite warranty, from 1 January 2021, checked 7 November 2026. Full terms from Romano or the brand.

FEATURES

- Soft pill shaped round bowl in matte white
- Holds 8 L
- Needs a 32 mm waste without overflow (not supplied)

DIMENSIONS

The dimension drawing and full specifications from Zenmo follow on the next page.

ZENMO

SPECIFICATIONS

LUNAR, WB 4012M, MATTE WHITE

LUNAR counter top basin.

LUNAR



WARRANTY

15 years
Replacement parts or the complete product

1 year
In-house labour from the date of purchase

CARE AND CLEANING

Clean with mild detergent and water. Avoid metal scourers, waxes, solvents, abrasives, acids and other chemical based cleaners.

DIMENSIONS, MM

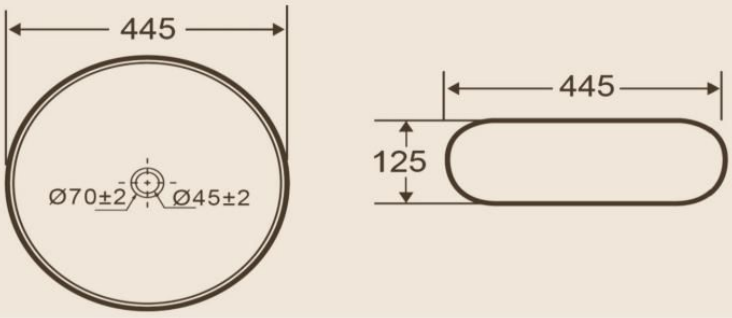

MODEL	CODE	FINISH
LUNAR	WB 4012M	Matte white
MATERIAL	**CAPACITY**	**SIZE**
Ceramic	8L	445 x 445 x 125mm
WEIGHT	**INSTALLATION**	**WASTE**
6.9kg	Counter top	32mm without overflow waste, not supplied

MEASUREMENTS ARE SUBJECT TO CHANGE DUE TO MANUFACTURING VARIATIONS. ALWAYS USE THE ACTUAL BASIN TO VERIFY THE CUT OUT.

ADDRESS
42 Castro Way, Derrimut VIC 3026

PHONE
(03) 8390 6300

EMAIL
sales@zenmo.com.au

WEBSITE
www.zenmo.com.au