ROMANO
Indoor & Outdoor Solutions

SPEC SHEET

KASKADE STONE / ABOVE COUNTER BASIN

Turin Benchtop Basin



RANGE
Pure
TYPE
Above counter basin
SHAPE
Rectangle
MATERIAL
Cast stone (composite)
SIZE
650 x 360 x 120 mm
COLOURS
Matte White, Matte Black, Matte Grey
CODE
VXA77-650-NIK9172NA

WARRANTY (DOMESTIC USE)

Stone basin: 7 years (Pure Range 10 years) / Wastes: 1 year

Conditions: installed by a licensed installer with a certificate of compliance; faulty manufacture or materials; removal and transport not covered. Summary of the Kaskade Stone warranty (kaskadestone.com.au FAQs), checked 7 November 2026. Full terms from Romano or the brand.

FEATURES

- 9.5 kg net weight
- Pure range, matte finish cast stone
- 32mm waste size
- Bespoke colours available at extra cost

DIMENSIONS

The dimension drawing and full specifications from Kaskade Stone follow on the next page.

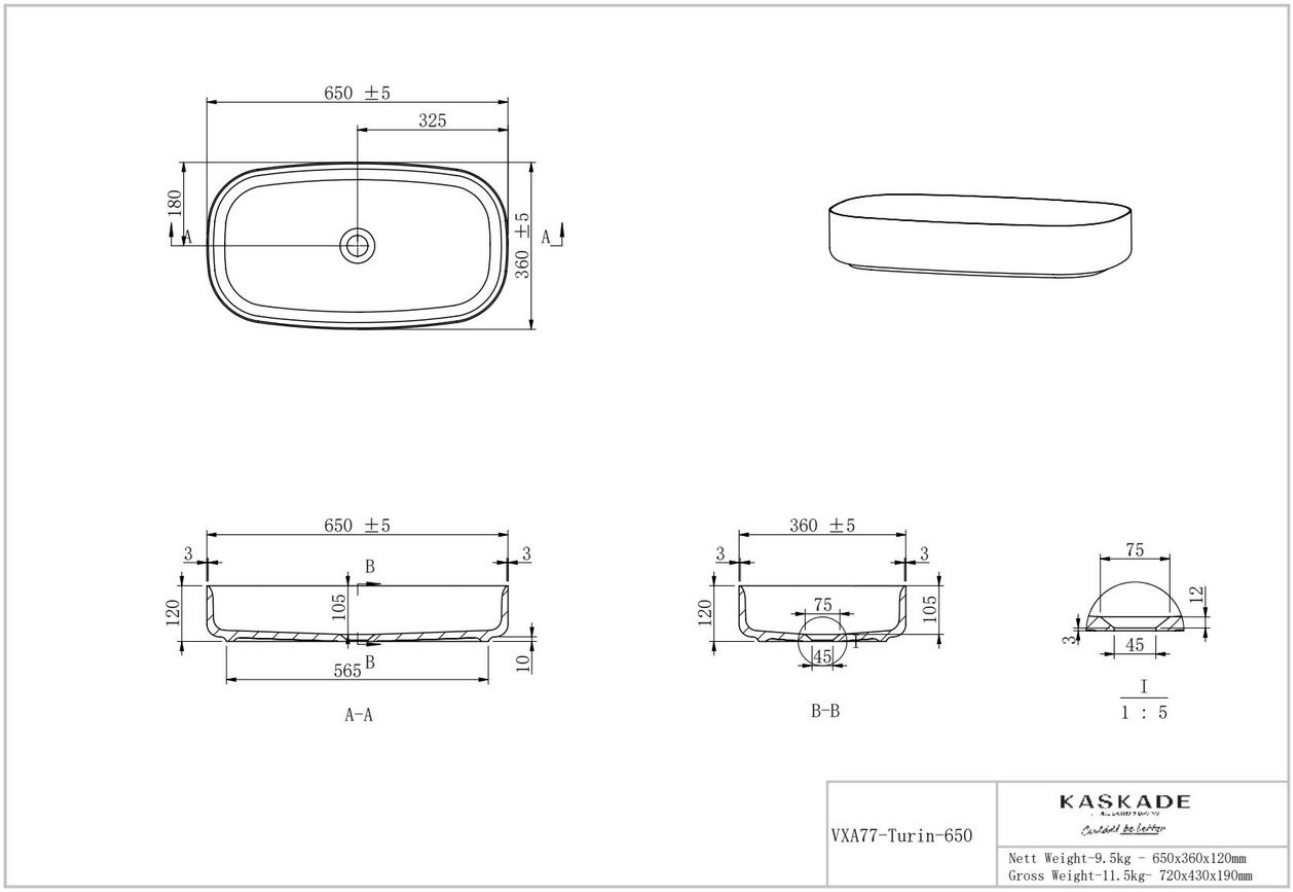
650 ±5
325
180
A
360 ±5
A
650 ±5
3
3
B
120
105
565
B
10
A-A
360 ±5
3
3
120
75
105
45
B-B
75
12
3
45
I
1 : 5
VXA77-Turin-650
KASKADE
Nett Weight-9.5kg - 650x360x120mm
Gross Weight-11.5kg- 720x430x190mm