ROMANO
Indoor & Outdoor Solutions

SPEC SHEET

KASKADE STONE / SEMI RECESSED BASIN

Arundel Semi Inset Basin



RANGE
Pure
TYPE
Semi recessed basin
SHAPE
Round
MATERIAL
Cast stone (composite)
SIZE
385 x 385 x 160 mm
COLOURS
Matte White, Matte Black, Matte Grey
CODE
VXA90-385-MATTE-WHITE

WARRANTY (DOMESTIC USE)

Stone basin: 7 years (Pure Range 10 years) / Wastes: 1 year

Conditions: installed by a licensed installer with a certificate of compliance; faulty manufacture or materials; removal and transport not covered. Summary of the Kaskade Stone warranty (kaskadestone.com.au FAQs), checked 7 November 2026. Full terms from Romano or the brand.

FEATURES

- 5 kg net weight
- Pure range, matte finish cast stone
- Sits partly sunk into the benchtop
- 32mm waste size
- Bespoke colours available at extra cost

DIMENSIONS

The dimension drawing and full specifications from Kaskade Stone follow on the next page.

Romano Indoor & Outdoor Solutions, 4/126 Canterbury Rd, Kilsyth South VIC 3137. 03 9720 4633. sales@romanoios.com.au

(版本号 A.0)

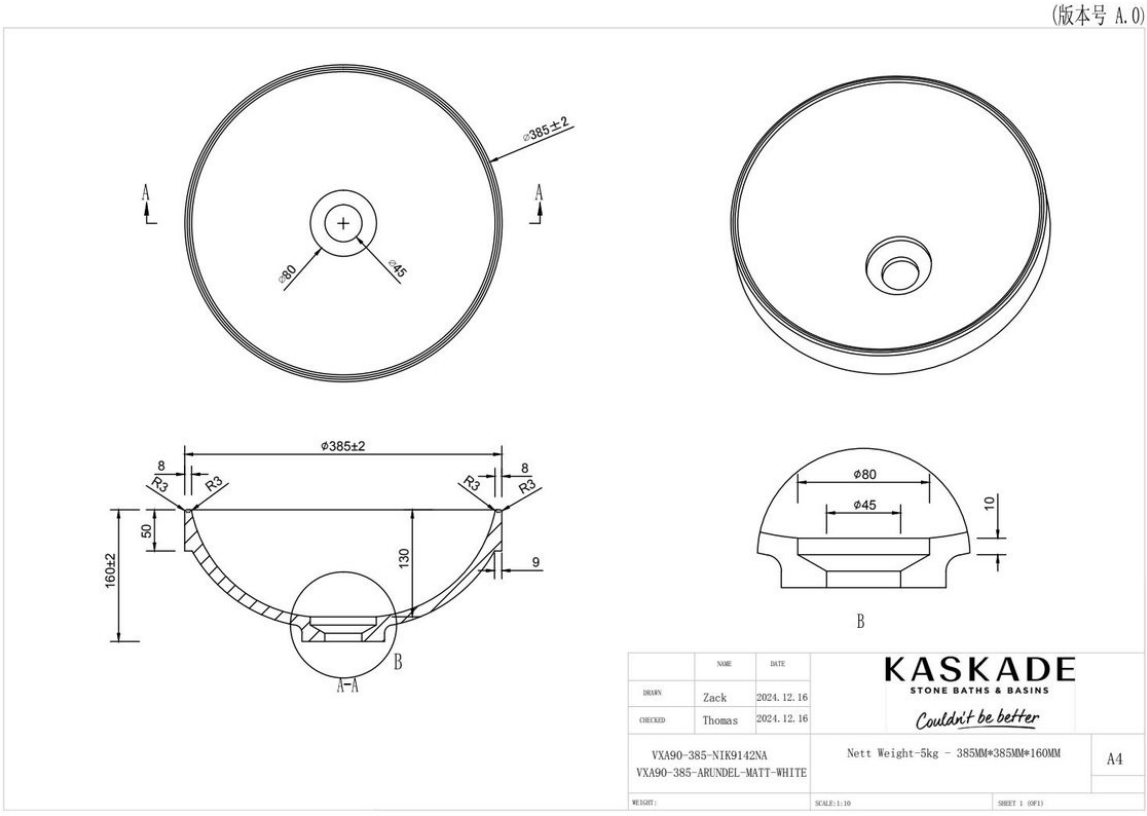

	NAME	DATE	KASKADE STONE BATHS & BASINS Couldn't be better
DRAWN	Zack	2024.12.16	
CHECKED	Thomas	2024.12.16	
VXA90-385-NIK9142NA VXA90-385-ARUNDEL-MATT-WHITE	Nett Weight-5kg - 385MM*385MM*160MM		A4
WEIGHT:	SCALE:1:10	SHEET 1 (OF1)	