ROMANO
Indoor & Outdoor Solutions

SPEC SHEET

JOHNSON SUISSE / ABOVE COUNTER BASIN

Venezia Square 1th



RANGE
Venezia
TYPE
Above counter basin
SHAPE
Square
MATERIAL
Ceramic
SIZE
350 x 350 x 135 mm
TAP HOLE
One
OVERFLOW
No
COLOURS
Ash, Matte Black, Sand, White
CODE
JBSV035.1.PW6

WARRANTY (DOMESTIC USE)

Vitreous china basin: 25 years replacement / Parts and labour: 1 year

Conditions: original owner, from the date of purchase; proof of purchase and installing plumber's details; domestic use. Summary of the Johnson Suisse warranty (johnsonsuisse.com.au/warranty), checked 7 November 2026. Full terms from Romano or the brand.

FEATURES

- Square countertop basin sitting 135mm above the bench
- Bowl capacity 5.9L
- Four finishes: white, ash, sand, matte black
- One tap hole

DIMENSIONS

The dimension drawing and full specifications from Johnson Suisse follow on the next page.

VENEZIA

SQUARE COUNTERTOP BASIN
350 x 350mm

CODE: JBSQ035x.PW6

FEATURES

- Contemporary vitreous china basin with fine lines
- Single taphole for mixer tap
- Wide soap platform
- Modern vessel style countertop fixing
- 32mm plug and waste
- 5.9L bowl capacity

COMPONENTS

Venezia square countertop basin	White	JBSV035
	Ash	JBSV035A
	Matte black	JBSV035MB
	Sand	JBSV035S
32mm pop-up waste - Chrome		PW6
32mm pop-up waste - Black		PW6B

WARRANTY

Vitreous china 25 years replacement
-refer to T&Cs at www.johnsonsuisse.com.au



ASH



WHITE



MATTE BLACK



SAND

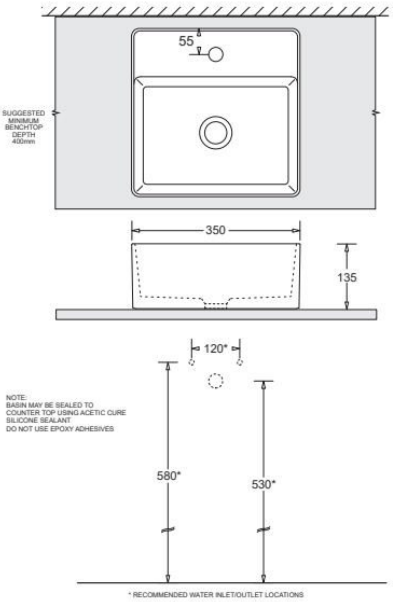

PRODUCT DIMENSIONS

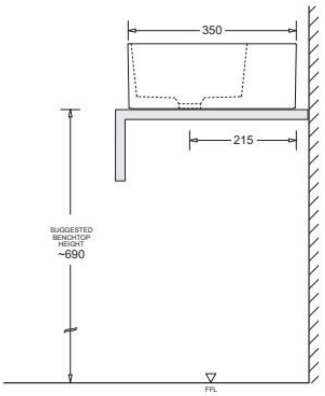

TECHNICAL DATA SHEET

SUPERSEDES ALL PREVIOUS ISSUES

All dimensions are in millimetres and are subject to normal manufacturing variation.
As product development is ongoing BPA reserves the right to vary specifications without notice.
Bathroom Products Australia Pty Ltd ABN 87 079 297 617

Johnson Suisse Bathroom Solutions
2/97 Banksia St.,
Botany, NSW 2019
TEL: 1300 717 717
www.johnsonsuisse.com.au
0925