ROMANO
Indoor & Outdoor Solutions

SPEC SHEET

JOHNSON SUISSE / ABOVE COUNTER BASIN

Venezia Round 0th



RANGE
Venezia
TYPE
Above counter basin
SHAPE
Round
MATERIAL
Ceramic
SIZE
390 x 390 x 130 mm
TAP HOLE
None
OVERFLOW
No
COLOURS
Ash, Matte Black, Sand, White
CODE
JBSV039.PW7

WARRANTY (DOMESTIC USE)

Vitreous china basin: 25 years replacement / Parts and labour: 1 year

Conditions: original owner, from the date of purchase; proof of purchase and installing plumber's details; domestic use. Summary of the Johnson Suisse warranty (johnsonsuisse.com.au/warranty), checked 7 November 2026. Full terms from Romano or the brand.

FEATURES

- Round vessel basin sitting 130mm above the bench
- Bowl capacity 8.1L
- Four finishes: white, ash, sand, matte black
- Chrome pop-up waste with pebble cover

DIMENSIONS

The dimension drawing and full specifications from Johnson Suisse follow on the next page.

VENEZIA

JohnsonSuisse Bathroom Solutions

ROUND COUNTERTOP VESSEL
390mm diam.

CODE: JBSQ039x.PW7

FEATURES

- Contemporary vitreous china bowl with fine lines
- Modern vessel style
- Countertop fitting permits benchtop or wall tapware mounting options
- 32mm pop-down waste with matching ceramic cover dome
- 8.1L bowl capacity

COMPONENTS

Venezia round countertop vessel	White	JBSV039
	Ash	JBSV039A
	Matte Black	JBSV039MB
	Sand	JBSV039S
32mm pop-down waste - Chrome		PW7
32mm pop-down waste - Black		PW7B



WHITE



ASH



MATTE BLACK



SAND

WARRANTY

Vitreous china 25 years replacement
-refer to T&Cs at www.johnsonsuisse.com.au

VC REPLACEMENT 25 YEAR WARRANTY

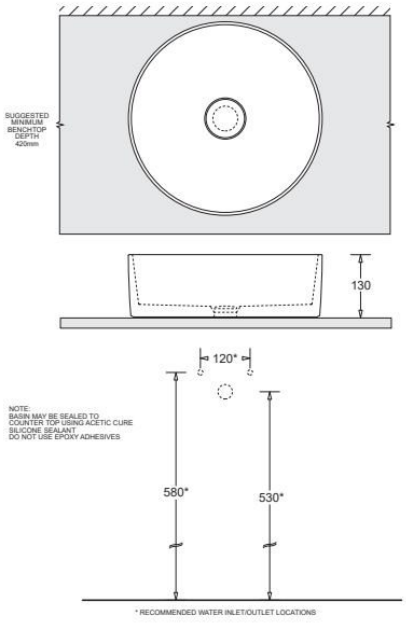

PRODUCT DIMENSIONS

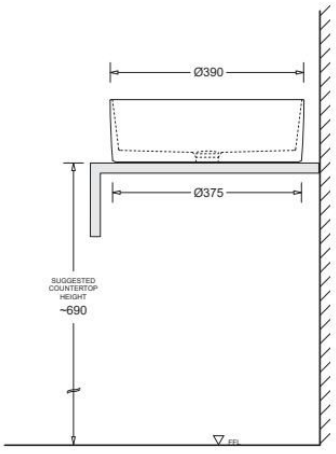

TECHNICAL DATA SHEET
SUPERSEDES ALL PREVIOUS ISSUES

All dimensions are in millimetres and are subject to normal manufacturing variation.
As product development is ongoing BPA reserves the right to vary specifications without notice.
Bathroom Products Australia Pty Ltd ABN 87 079 297 617

JohnsonSuisse Bathroom Solutions
2/97 Banksia St.,
Botany, NSW 2019
TEL: 1300 717 717
www.johnsonsuisse.com.au
0925