ROMANO
Indoor & Outdoor Solutions

SPEC SHEET

JOHNSON SUISSE / SEMI RECESSED BASIN

Quado Rectangular Semi-inset Basin



RANGE
Quado
TYPE
Semi recessed basin
SHAPE
Rectangle
MATERIAL
Ceramic
SIZE
410 x 340 mm
TAP HOLE
One
OVERFLOW
No
COLOURS
White
CODE
JBSQ641.1.PW6

WARRANTY (DOMESTIC USE)

Vitreous china basin: 25 years replacement / Parts and labour: 1 year

Conditions: original owner, from the date of purchase; proof of purchase and installing plumber's details; domestic use. Summary of the Johnson Suisse warranty (johnsonsuisse.com.au/warranty), checked 7 November 2026. Full terms from Romano or the brand.

FEATURES

- Compact semi-inset rectangular basin
- Bowl capacity 4.3L
- Suits a single mixer tap

DIMENSIONS

The dimension drawing and full specifications from Johnson Suisse follow on the next page.

QUADO

RECTANGULAR SEMI-INSET BASIN
410 x 340mm

CODE: JBSG641.1.PW6

FEATURES

- Contemporary vitreous china semi-inset basin
- Modern cubic styling
- Single taphole for mixer tap
- Wide soap platform
- 32mm plug and waste
- 4.3L bowl capacity



COMPONENTS

Quado rectangular semi-inset basin	JBSQ641.1
32mm Pop-up waste	PW6

WARRANTY

Vitreous china 25 years replacement
-refer to T&Cs at www.johnsonsuisse.com.au

PRODUCT DIMENSIONS

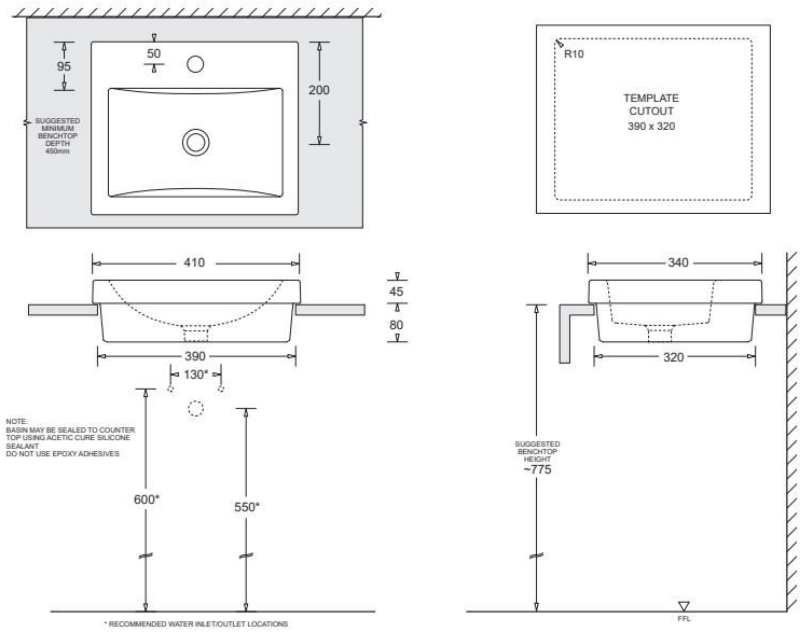

TECHNICAL DATA SHEET
SUPERSEDES ALL PREVIOUS ISSUES

All dimensions are in millimetres and are subject to normal manufacturing variation.
As product development is ongoing BPA reserves the right to vary specifications without notice.
Bathroom Products Australia Pty Ltd ABN 87 079 297 617
1023

Johnson Suisse Bathroom Solutions
2/97 Banksia St.,
Botany, NSW 2019
TEL: 1300 717 717
www.johnsonsuisse.com.au