ROMANO
Indoor & Outdoor Solutions

SPEC SHEET

JOHNSON SUISSE / WALL HUNG BASIN

Milano Corner Basin, 300x300mm



RANGE
Milano
TYPE
Wall hung basin
MATERIAL
Ceramic
SIZE
300 x 300 mm
TAP HOLE
One
COLOURS
White
CODE
MBSM830.1.PW2

WARRANTY (DOMESTIC USE)

Vitreous china basin: 25 years replacement / Parts and labour: 1 year

Conditions: original owner, from the date of purchase; proof of purchase and installing plumber's details; domestic use. Summary of the Johnson Suisse warranty (johnsonsuisse.com.au/warranty), checked 7 November 2026. Full terms from Romano or the brand.

FEATURES

- Corner hand rinse basin
- Fits where space is tight
- Bowl capacity 3.9L

DIMENSIONS

The dimension drawing and full specifications from Johnson Suisse follow on the next page.

MILANO

COMPACT CORNER BASIN
300 x 300mm

CODE: MBSM830.1

FEATURES

- Contemporary vitreous china basin
- Compact size for bathrooms with limited space
- Single taphole for mixer tap
- 32mm waste
- 3.9L bowl capacity



COMPONENTS

Milano Compact Corner basin	MBSM830.1
32mm plug and waste - Plastic	PW2
Installation kit (Rag bolts)	X022

WARRANTY

Vitreous china 25 years replacement
-refer to T&Cs at www.johnsonsuisse.com.au

PRODUCT DIMENSIONS

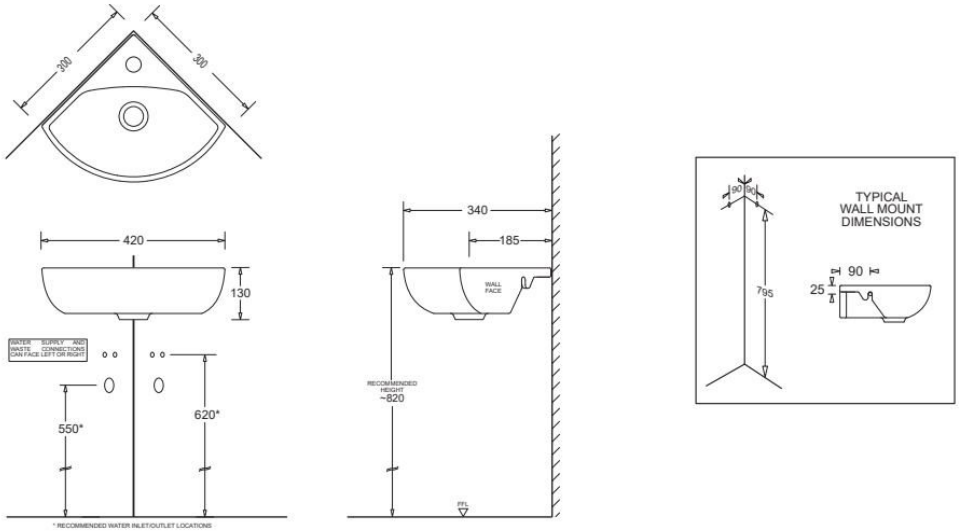

TECHNICAL DATA SHEET
SUPERSEDES ALL PREVIOUS ISSUES

All dimensions are in millimetres and are subject to normal manufacturing variation.
As product development is ongoing BPA reserves the right to vary specifications without notice.
Bathroom Products Australia Pty Ltd ABN 87 079 297 617

1122

2/97 Banksia St., Botany, NSW 2019
TEL: 1300 717 717 FAX: 1300 746 480
www.johnsonsuisse.com.au