ROMANO
Indoor & Outdoor Solutions

SPEC SHEET

JOHNSON SUISSE / WALL HUNG BASIN

Gemelli Compact Wall Basin



RANGE
Gemelli
TYPE
Wall hung basin
SHAPE
Rectangle
MATERIAL
Ceramic
SIZE
400 x 290 mm
TAP HOLE
One
OVERFLOW
No
COLOURS
White
CODE
JBSG840.1.PW6

WARRANTY (DOMESTIC USE)

Vitreous china basin: 25 years replacement / Parts and labour: 1 year

Conditions: original owner, from the date of purchase; proof of purchase and installing plumber's details; domestic use. Summary of the Johnson Suisse warranty (johnsonsuisse.com.au/warranty), checked 7 November 2026. Full terms from Romano or the brand.

FEATURES

- Compact wall or countertop basin
- Bowl capacity 3.8L
- Right hand tap hole

DIMENSIONS

The dimension drawing and full specifications from Johnson Suisse follow on the next page.

GEMELLI COMPACT

JohnsonSuisse Bathroom Solutions

COMPACT BASIN
400 x 290mm

CODE: JBSG840.1.1.PW6

FEATURES

- Contemporary vitreous china basin with fine lines
- Countertop mounting permits wall or bench-top tapware options
- Available with 1 taphole
- 32mm waste outlet with decorative ceramic cover cap
- 8.1L bowl capacity

COMPONENTS

Gemelli Compact basin	JBSG840.1
32mm pop-up waste - Chrome	PW6
Installation kit (Rag bolts)	X022



WARRANTY

Vitreous china 25 years replacement
-refer to T&Cs at www.johnsonsuisse.com.au

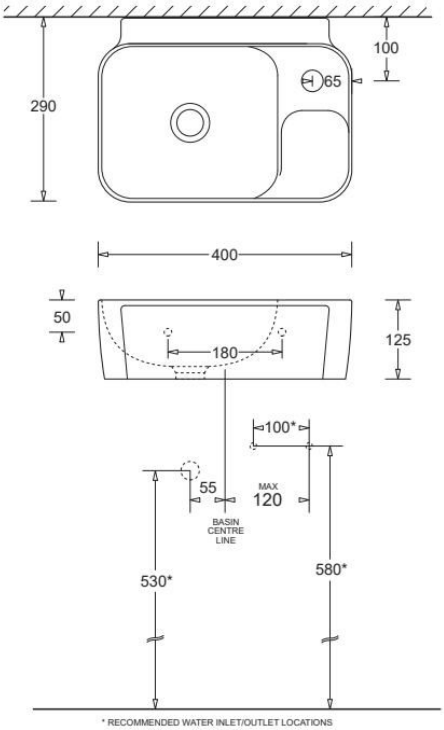

PRODUCT DIMENSIONS

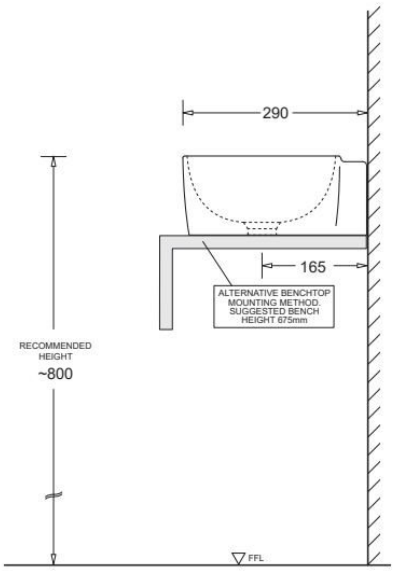

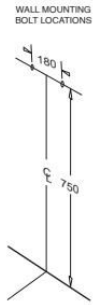

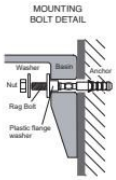

TECHNICAL DATA SHEET
SUPERSEDES ALL PREVIOUS ISSUES

All dimensions are in millimetres and are subject to normal manufacturing variation.
As product development is ongoing BPA reserves the right to vary specifications without notice.
Bathroom Products Australia Pty Ltd ABN 87 079 297 617
1023

JohnsonSuisse Bathroom Solutions
2/97 Banksia St.,
Botany, NSW 2019
TEL: 1300 717 717
www.johnsonsuisse.com.au