ROMANO
Indoor & Outdoor Solutions

SPEC SHEET

JOHNSON SUISSE / ABOVE COUNTER BASIN

Emilia Round Compact Vanity Basin



RANGE
Emilia
TYPE
Above counter basin
SHAPE
Round
MATERIAL
Ceramic
SIZE
360 x 360 mm
TAP HOLE
None
OVERFLOW
No
COLOURS
White
CODE
JBSE136.PW6

WARRANTY (DOMESTIC USE)

Vitreous china basin: 25 years replacement / Parts and labour: 1 year

Conditions: original owner, from the date of purchase; proof of purchase and installing plumber's details; domestic use. Summary of the Johnson Suisse warranty (johnsonsuisse.com.au/warranty), checked 7 November 2026. Full terms from Romano or the brand.

FEATURES

- Compact round vanity basin
- Bowl capacity 4.9L

DIMENSIONS

The dimension drawing and full specifications from Johnson Suisse follow on the next page.

EMILIA

JohnsonSuisse Bathroom Solutions

ROUND VANITY BASIN
360mm diam.

CODE: JBSE136.PW6

FEATURES
- Contemporary vitreous china vanity basin
- Compact space-saving style
- 32mm plug and waste
- 4.4L bowl capacity

COMPONENTS

Emilia round vanity basin	JBSE136
32mm Pop-up waste	PW6

WARRANTY
Vitreous china 25 years replacement
-refer to T&Cs at www.johnsonsuisse.com.au



PRODUCT DIMENSIONS

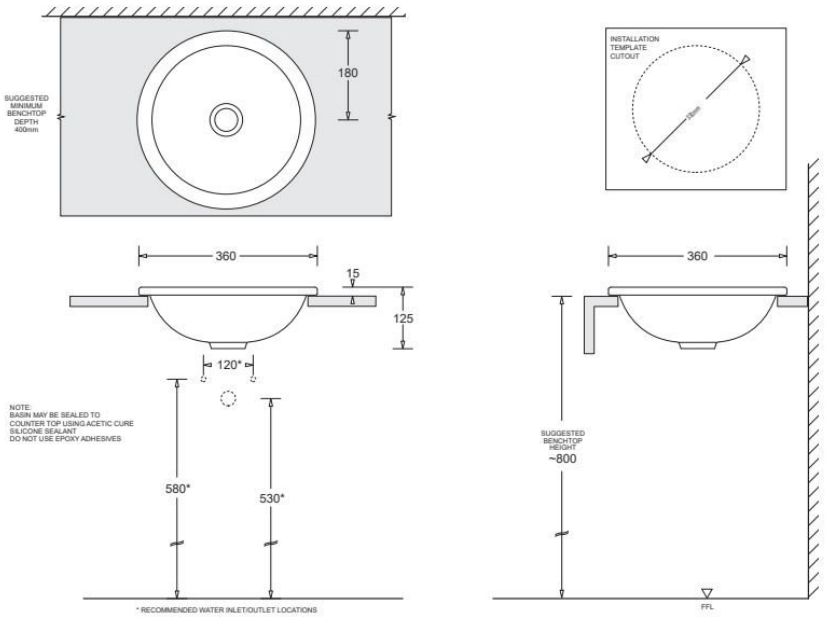

TECHNICAL DATA SHEET
SUPERSEDES ALL PREVIOUS ISSUES

All dimensions are in millimetres and are subject to normal manufacturing variation.
As product development is ongoing BPA reserves the right to vary specifications without notice.
Bathroom Products Australia Pty Ltd ABN 87 079 297 617
1023

JohnsonSuisse Bathroom Solutions
2/97 Banksia St.,
Botany, NSW 2019
TEL: 1300 717 717
www.johnsonsuisse.com.au