ROMANO
Indoor & Outdoor Solutions

SPEC SHEET

CAROMA / WALL HUNG BASIN

Liano II Hand Wall Basin (1 Tap Hole) with Overflow



RANGE
Liano II
TYPE
Wall hung basin
SHAPE
Round
MATERIAL
Fireclay
SIZE
530 x 280 mm
TAP HOLE
One
OVERFLOW
Yes
COLOURS
White, Matte White, Matte Black
CODE
853015W / 853015MW / 853015MB

WARRANTY (DOMESTIC USE)

Basin: 20 years (replacement product or parts) / Labour: 1 year

Conditions: installed by a licensed plumber to Australian standards; proof of purchase; original owner. Summary of the Caroma warranty v16 (April 2026), checked 7 November 2026. Full terms from Romano or the brand.

FEATURES

- Fine fireclay construction
- One tap hole
- With overflow

DIMENSIONS

The dimension drawing and full specifications from Caroma follow on the next page.

CAROMA

Revision: 2
Date: 15/07/2026

Liano II

Ceramic Hand Wall Basin

Nominal Size: 530mm x 280mm



CAROMA

Liano II

Ceramic Hand Wall Basin
Basin Size: 530mm x 280mm (nominal)



Basin pictured in White (W) colour option.
Pictured with Liano II Basin Mixer (not included).

Other Basin Colour Options:



The Liano II Basin range is a collection of fashionable basins that allow you to select a style and colour finish to suit your own personal taste, but also deliver to your functional needs. Available in popular round and pill shapes with contemporary thin rim design and in a range of matte colour finishes, the Liano II basin range is the collection you need to make a statement in your bathroom.

Optional pop-up plug & wastes and new dress rings are available in Chrome, Matte Black, PVD Brushed Nickel, PVD Brushed Brass and PVD Gunmetal to match with Liano II tapware.

The basin is suitable for general purpose, domestic and commercial applications.

Tap Holes: Basin available in: One taphole (no overflow) Code No.853010; one taphole (with overflow Code No.853015.

Waste Outlet: The basin has been designed and supplied with an integrated waste with a ceramic pop up waste cap matched to the basin colour. Optional wastes are available with ceramic waste caps in 6 finishes, White (W), Matte Green (MG), Matte Grey (MGR), Matte Pink (MP), Matte Speckled (MS) and Matte White (MW). Code No.687350. To colour match to tapware and bottle trap, optional wastes are available with brass waste caps in 5 finishes, Black (B), Brushed Brass (BB), Brushed Nickel (BN), Chrome (C) and Gunmetal Grey (GM). Code No.687330.

Traps: 40mm Caroma Plastic Short P-trap outlet centre Code No.102115; 40mm Vogue bottle trap is available in 6 finishes to colour match to tapware and waste cap: Brushed Brass (BB), Brushed Nickel (BN), Chrome (C), Gunmetal Grey (GM), Matte Black (B) and White (W). Code No.687294 except Chrome Code No.687295C.

Bowl Capacity: 6 litres (with no overflow) / 2.7 litres to overflow.

Overflow: Overflow and non-overflow option available. Overflow designed for maximum tap flow rate of 15 litres/minute.

Fixing: **D.200 Basin Fixing Kit** – Supplied. Bolts directly to the finished wall.

Colours: White (W), Matte Green (MG*), Matte Grey (MGR)*, Matte Pink (MP)*, Matte Speckled (MS)* and Matte White (MW). ** Not available with an overflow option.*

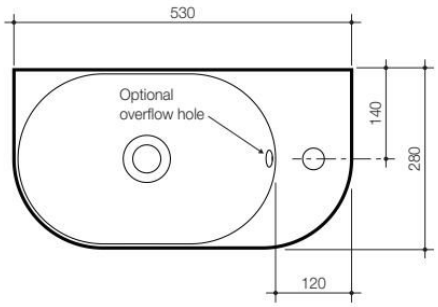

All dimensions are in millimetres and are subject to normal manufacturing variations. Caroma pursues a policy of continuing improvement in design and performance of its products. The right is therefore reserved to vary specifications without notice.

Overflow option shown on line drawings.



D.200 Basin Fixing Kit included with basin

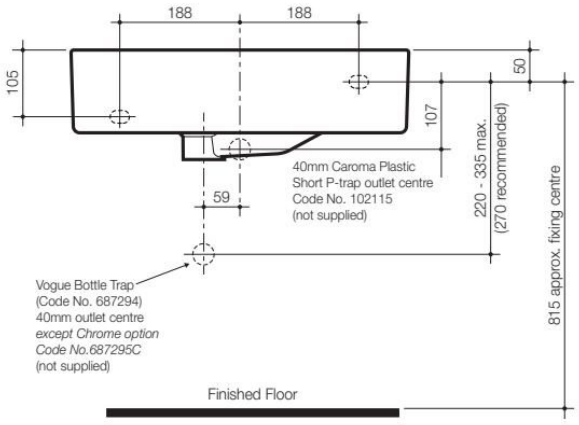

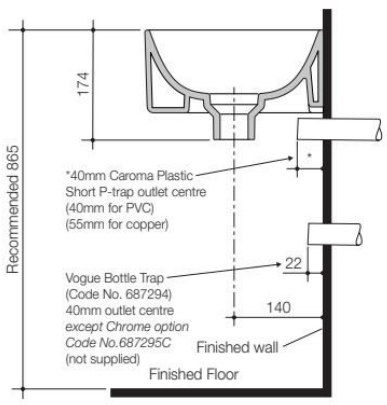

Caroma Industries Limited ABN 35 000 189 499 **Sales Offices in all States.**