ROMANO
Indoor & Outdoor Solutions

SPEC SHEET

CAROMA / INSET (DROP IN) BASIN

Liano II 600mm Pill Inset Basin with Tap Landing (0 Tap Hole) with Overflow



RANGE
Liano II
TYPE
Inset (drop in) basin
SHAPE
Oval
MATERIAL
Fireclay
SIZE
600 x 400 mm
TAP HOLE
None
OVERFLOW
Yes
COLOURS
White, Matte White, Matte Black
CODE
853105W / 853105MW / 853105MB

WARRANTY (DOMESTIC USE)

Basin: 20 years (replacement product or parts) / Labour: 1 year

Conditions: installed by a licensed plumber to Australian standards; proof of purchase; original owner. Summary of the Caroma warranty v16 (April 2026), checked 7 November 2026. Full terms from Romano or the brand.

FEATURES

- Fine fireclay construction
- No tap hole (tap on bench or wall)
- With overflow

DIMENSIONS

The dimension drawing and full specifications from Caroma follow on the next page.

CAROMA

Revision: 1
Date: 15/07/2026

Liano II 600 Pill

Ceramic Inset Vanity Basin

Nominal Size: 600mm x 400mm



CAROMA

Liano II 600 Pill

Ceramic Inset Vanity Basin
Basin Size: 600mm x 400mm (nominal)



Basin pictured in Gloss White (W) colour option with no overflow. Pictured with Liano II Basin Mixer and Dress Ring in Brushed Brass colour option (not included).

The Liano II Basin range is a collection of fashionable basins that allow you to select a style and colour finish to suit your own personal taste, but also delivers to your functional needs. Available in popular round and pill shapes with contemporary thin rim design and in a range of matte colour finishes, the Liano II basin range is the collection you need to make a statement in your bathroom.

Optional pop-up plug & wastes and new dress rings are available in Chrome, Matte Black, PVD Brushed Nickel, PVD Brushed Brass and PVD Gunmetal to match with Liano II tapware.

The basin is suitable for general purpose, domestic and commercial applications.

Tap Holes: Basin available in: No tapholes (no overflow) Code No.853100; no tapholes (with overflow) Code No.853105; one taphole (no overflow) Code No.853110; one taphole (with overflow) Code No.853115.

Waste Outlet: The basin has been designed and supplied with an integrated waste with a ceramic pop up waste cap matched to the basin colour. Optional wastes are available with ceramic waste caps in 6 finishes, Gloss White (W)*, Matte Green (MG), Matte Grey (MGR), Matte Pink (MP), Matte Speckled (MS), Matte Black (MB) and Matte White (MW). Code No.687350. *Gloss White (W) option Code No.687330AW.
To colour match to tapware and bottle trap, optional wastes are available with brass waste caps in 5 finishes, Black (B), Brushed Brass (BB), Brushed Nickel (BN), Chrome (C) and Gunmetal Grey (GM). Code No.687330.

Dress Ring: To colour match to tapware and bottle trap, optional dress rings are available in 5 finishes, Brushed Brass (BB), Brushed Nickel (BN), Chrome (C), Gunmetal Grey (GM) and Matte Black (MB). Code No.687034.

Bowl Capacity: 8 litres (with no overflow) / 3.6 litres to overflow.

Overflow: Overflow and non-overflow option available. Overflow designed for maximum tap flow rate of 15 litres/minute.

Fixing: The underside of the basin rim must be sealed to the counter top with an acetic cured silicone sealant. **Epoxy type glues must not be used.**
The basin is supplied with a template which must be used for the counter top cut-out.

Colours: Gloss White (W), Matte Green (MG)*, Matte Grey (MGR)*, Matte Pink (MP)*, Matte Speckled (MS)*, Matte Black (MB) and Matte White (MW). * *Not available with an overflow option.*

Other Basin Colour Options:



Non-overflow versions pictured above.

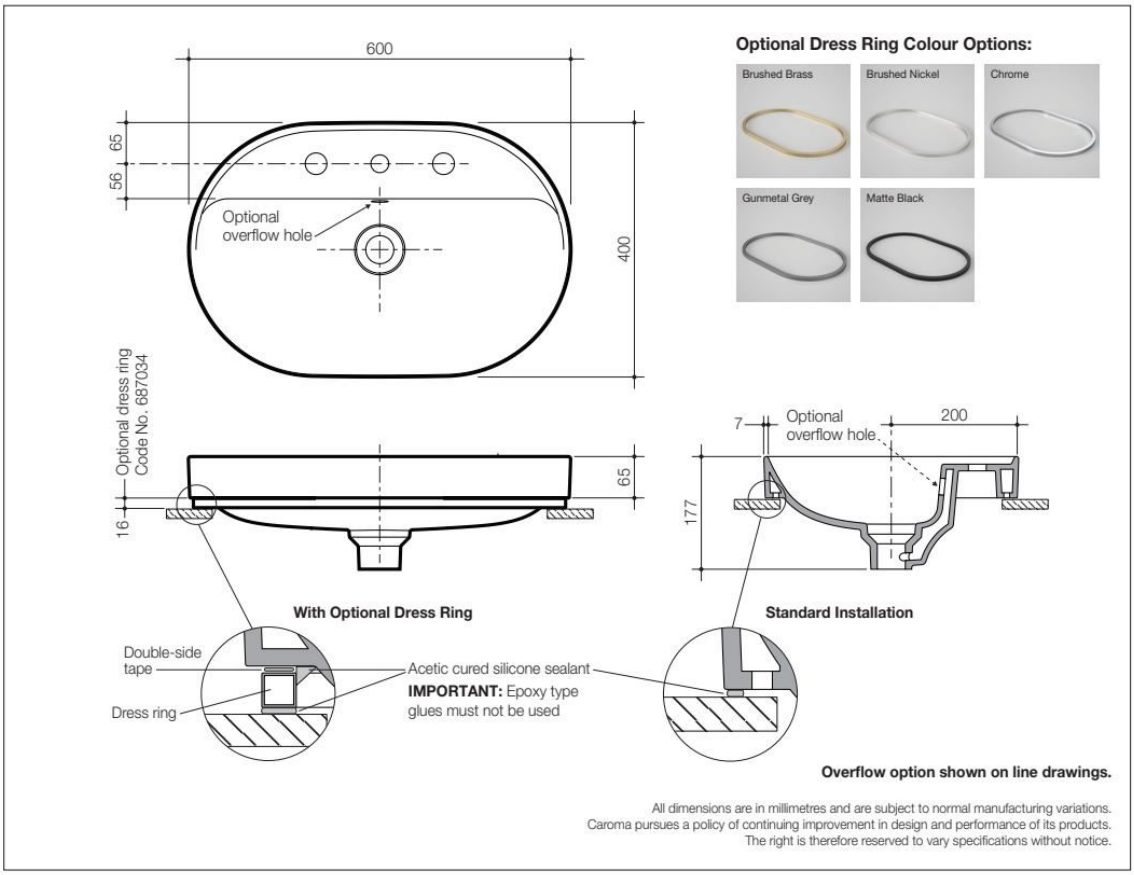

All dimensions are in millimetres and are subject to normal manufacturing variations.
Caroma pursues a policy of continuing improvement in design and performance of its products.
The right is therefore reserved to vary specifications without notice.

Caroma Industries Limited ABN 35 000 189 499 **Sales Offices in all States.**