ROMANO
Indoor & Outdoor Solutions

SPEC SHEET

CAROMA / UNDER COUNTER BASIN

Contura II Undercounter Basin



RANGE
Contura II
TYPE
Under counter basin
SHAPE
Oval
MATERIAL
Ceramic
SIZE
578 x 408 mm
TAP HOLE
None
OVERFLOW
No
COLOURS
White, Matte White, Matte Clay
CODE
853600W / 853600MW / 853600CL

WARRANTY (DOMESTIC USE)

Basin: 20 years (replacement product or parts) / Labour: 1 year

Conditions: installed by a licensed plumber to Australian standards; proof of purchase; original owner. Summary of the Caroma warranty v16 (April 2026), checked 7 November 2026. Full terms from Romano or the brand.

FEATURES

- Bowl capacity 9.2 L
- Vitreous china or ceramic construction
- No tap hole (tap on bench or wall)
- No overflow

DIMENSIONS

The dimension drawing and full specifications from Caroma follow on the next page.

CAROMA

Revision: 0
Date: 18/04/2024

Supersedes all previous issues

Contura II 530

Ceramic Under Counter Vanity Basin

Nominal Size: 578mm x 408mm



CAROMA

Contura II 530

Ceramic Under Counter Vanity Basin
Basin Size: 578mm x 408mm (nominal)



Other Basin Colour Options:





Embrace natural luxury with the Caroma Contura Collection - sculptural design with an organic simplicity to create a sense of subtle indulgence for your bathroom. The basin is suitable for general purpose, domestic and commercial applications.

Tap Holes: Basin available in: No tapholes Code No.853600.

Waste Outlet: The basin has been designed and supplied with an integrated waste with a ceramic pop up waste cap matched to the basin colour. Optional wastes are available with ceramic waste caps in 5 finishes, Matte Black (MB), Matte Green (MG), Matte Grey (MGR), Matte Pink (MP), Matte Speckled (MP). Code No.687350.

To colour match to tapware, optional wastes are available with brass waste caps in 6 finishes, Black (B), Brushed Brass (BB), Brushed Bronze (BBZ), Brushed Nickel (BN), Chrome (C) and Gunmetal Grey (GM). Code No.687330.

Bowl Capacity: 4.8 litres.

Overflow: Overflow not available.

Fixing: The rim of the basin must be sealed to the counter top with an acetic cured silicone sealant. **Epoxy type glues must not be used.**
The basin is supplied with a template which must be used for the counter top cut-out.

Colours: White (W), Matte White (MW) and Clay (CL).

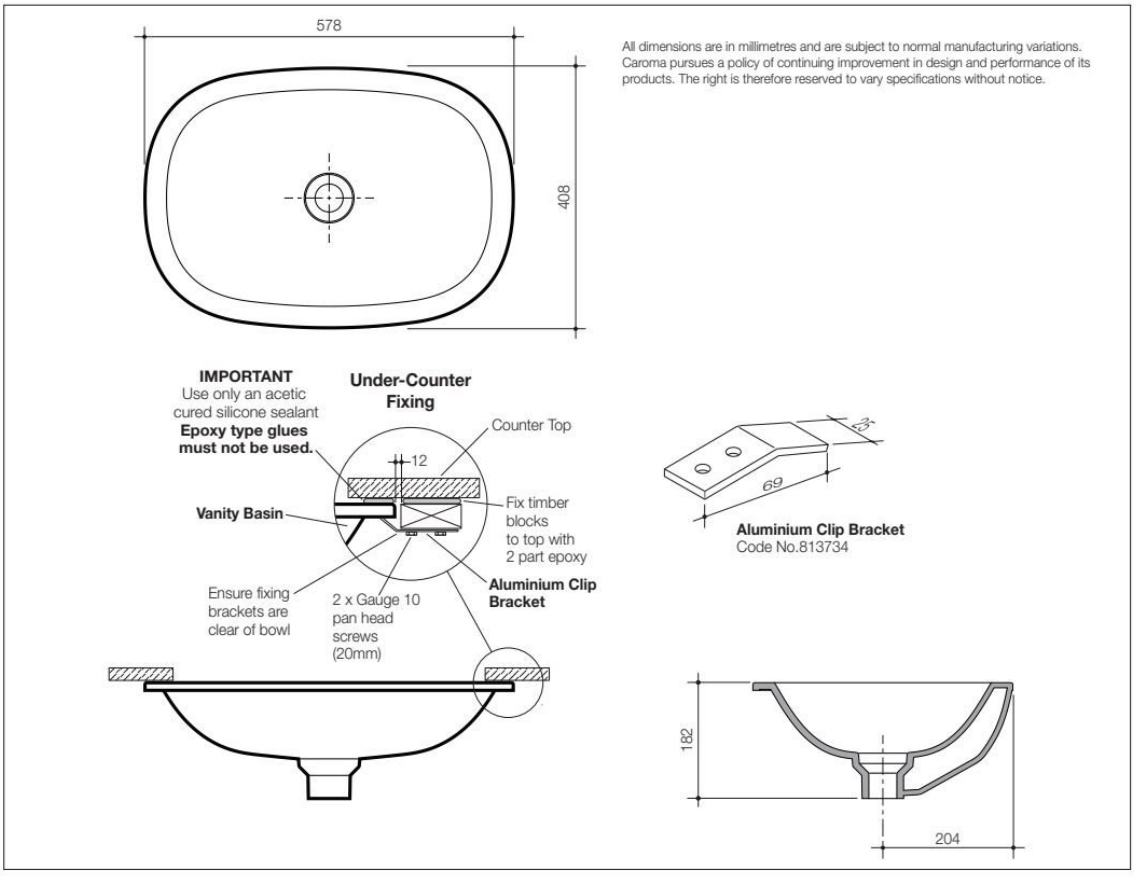

Caroma Industries Limited ABN 35 000 189 499 **Sales Offices in all States.**