ROMANO
Indoor & Outdoor Solutions

SPEC SHEET

ADP / WALL HUNG BASIN

Veil Wall Hung Basin



RANGE
Veil
TYPE
Wall hung basin
MATERIAL
Ceramic
SIZE
605 x 460 x 120 mm
COLOURS
Gloss White, Matte Black, Matte Pearl
CODE
TOPCVEL060CGW / TOPCVEL060CGW-0TH / TOPCVEL060CMB / TOPCVEL060CMB-0TH / TOPCVEL060CMW / TOPCVEL060CMW-0TH

WARRANTY (DOMESTIC USE)

Ceramic basin: 1 year, plus 1 year parts and labour

Conditions: installed by a licensed tradesperson; manufacturing faults, proof of purchase; report damage within 48 hours of delivery. Summary of the ADP installation, care and warranty guide, checked 7 November 2026. Full terms from Romano or the brand.

FEATURES

- Italian ceramic by Scarabeo
- Thin slab-style wall hung basin in three finishes
- Zero or one tap hole; fixing kit included

DIMENSIONS

The dimension drawing and full specifications from ADP follow on the next page.

Romano Indoor & Outdoor Solutions, 4/126 Canterbury Rd, Kilsyth South VIC 3137. 03 9720 4633. sales@romanoios.com.au

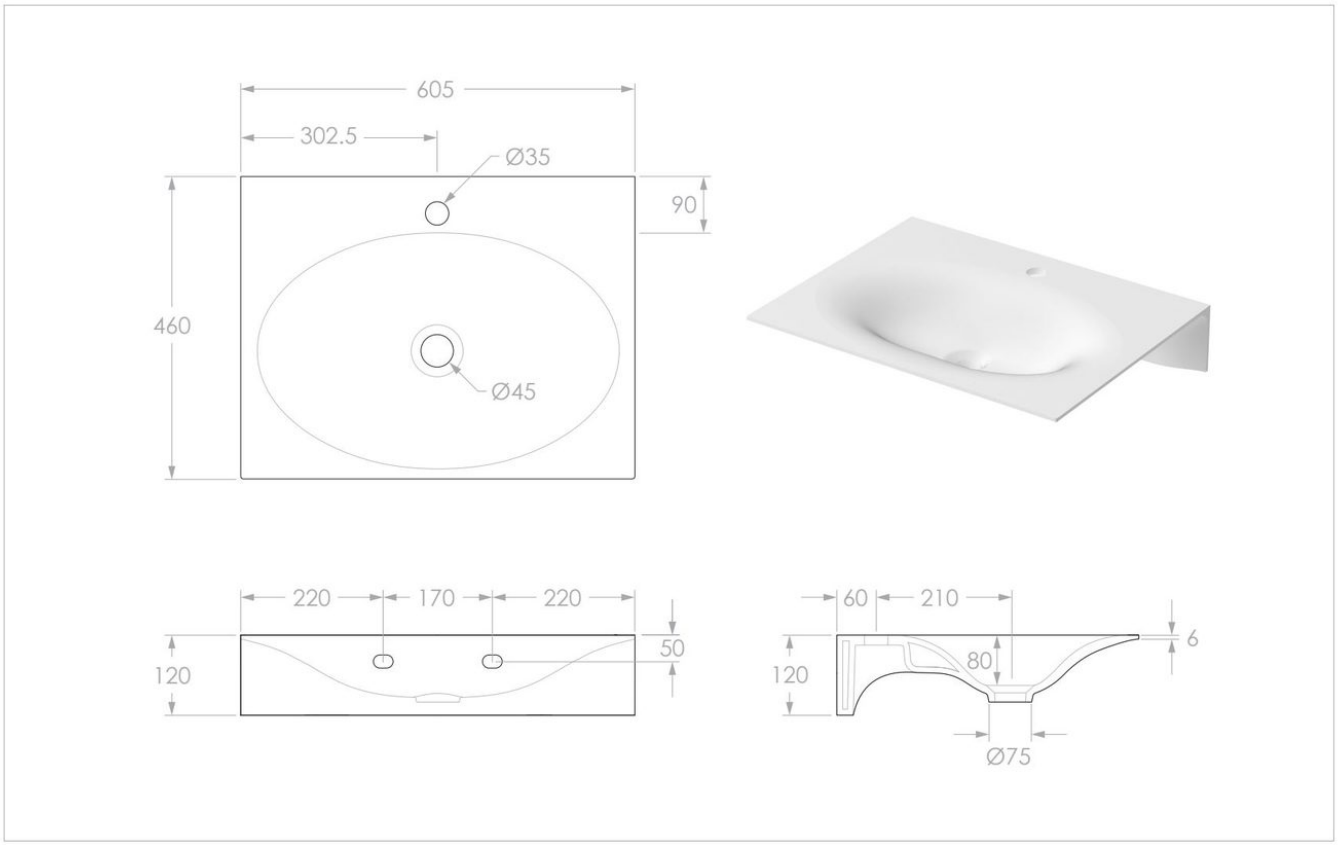

Adp

PRODUCT:	VEIL WALL BASIN 600
SIZE:	605W x 460D x 120H
CODE:	TOPCVEL060C*
VERSION: 01	DATE: 05/09/2023

CAPACITY:	3.5L TO RIM
STYLE:	WALL BASIN
WEIGHT:	11KG
MATERIAL:	CERAMIC
*TAP HOLE:	0 OR 1 TAP HOLE AVAILABLE (ADD -0TH FOR 0 TAP HOLE)

NOTES:

DIMENSIONS ARE NOMINAL. DO NOT DRILL OR ROUGH IN UNTIL YOU HAVE RECIEVED AND MEASURED YOUR PRODUCT.
ALL DIMENSIONS ARE IN MILLIMETRES. DO NOT MEASURE FROM DRAWING.
BASIN SUITS 32MM WASTE. ADP UNIVERSAL PLUG AND WASTE RECOMMENDED (SOLD SEPARATELY).
DUE TO THE MANUFACTURING NATURE OF CERAMICS, +/-5MM VARIATION IN SIZE AND DETAIL CAN BE EXPECTED.