ROMANO
Indoor & Outdoor Solutions

SPEC SHEET

ADP / ABOVE COUNTER BASIN

Monroe Above Counter Basin



RANGE
Monroe
TYPE
Above counter basin
SHAPE
Round
MATERIAL
Ceramic
SIZE
400 x 400 x 100 mm
TAP HOLE
None
COLOURS
Gloss White, Matte White, Matte Ivory, Matte Concrete, Matte Olive, Matte Forest
CODE
TOPCMNR400GW / TOPCMNR400MW / TOPCMNR400MI / TOPCMNR400MC / TOPCMNR400MO / TOPCMNR400MF

WARRANTY (DOMESTIC USE)

Ceramic basin: 1 year, plus 1 year parts and labour

Conditions: installed by a licensed tradesperson; manufacturing faults, proof of purchase; report damage within 48 hours of delivery. Summary of the ADP installation, care and warranty guide, checked 7 November 2026. Full terms from Romano or the brand.

FEATURES

- Shallow round bowl, only 100 mm high
- Gloss or matte white plus four matte colours
- Holds about 8.5 L

DIMENSIONS

The dimension drawing and full specifications from ADP follow on the next page.

Romano Indoor & Outdoor Solutions, 4/126 Canterbury Rd, Kilsyth South VIC 3137. 03 9720 4633. sales@romanoios.com.au

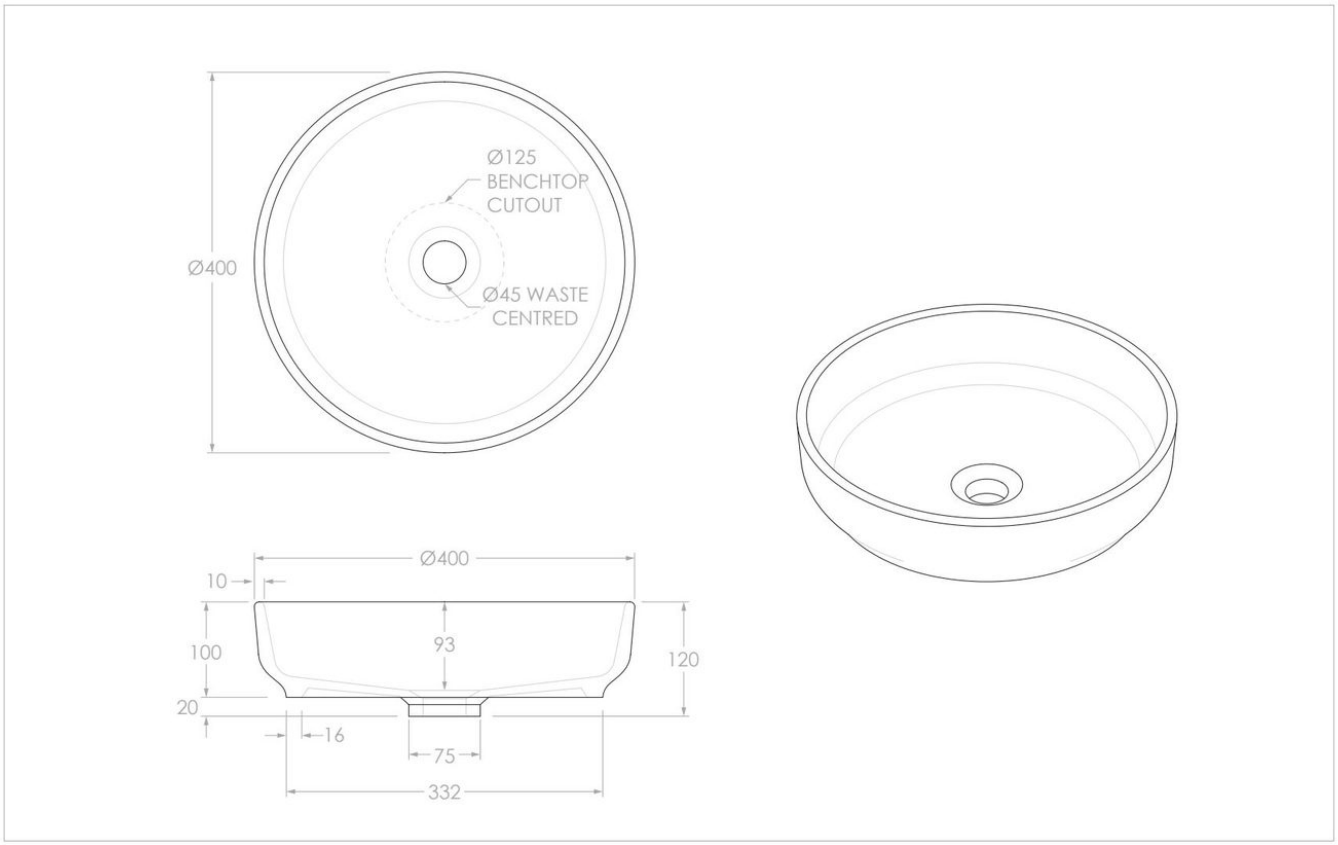

Adp

PRODUCT:	MONROE BASIN
SIZE:	400W x 400D x 120H
CODE:	TOPCMNR400*
VERSION: 03	DATE: 25/09/2024

STYLE:	ABOVE COUNTER
CAPACITY:	8.5L TO RIM
MATERIAL:	CERAMIC
FINISH*:	VARIOUS FINISHES AVAILABLE, SEE BROCHURE OR ADPAUSTRALIA.COM.AU FOR DETAILS

NOTES:

DIMENSIONS ARE NOMINAL. DO NOT DRILL OR ROUGH IN UNTIL YOU HAVE RECIEVED AND MEASURED YOUR PRODUCT.
ALL DIMENSIONS ARE IN MILLIMETRES. DO NOT MEASURE FROM DRAWING.
BASIN SUITS 32MM WASTE. ADP UNIVERSAL PLUG AND WASTE RECOMMENDED (SOLD SEPARATELY).
DUE TO THE MANUFACTURING NATURE OF CERAMICS, +/-5MM VARIATION IN SIZE AND DETAIL CAN BE EXPECTED.