ROMANO
Indoor & Outdoor Solutions

SPEC SHEET

ADP / SEMI RECESSED BASIN

Humphrey Semi-Recessed Wall Basin



RANGE
Humphrey
TYPE
Semi recessed basin
MATERIAL
Ceramic
SIZE
405 x 280 x 110 mm
TAP HOLE
One
OVERFLOW
No
COLOURS
Gloss White
CODE
TOPCHUMSRWH

WARRANTY (DOMESTIC USE)

Ceramic basin: 1 year, plus 1 year parts and labour

Conditions: installed by a licensed tradesperson; manufacturing faults, proof of purchase; report damage within 48 hours of delivery. Summary of the ADP installation, care and warranty guide, checked 7 November 2026. Full terms from Romano or the brand.

FEATURES

- Small semi-recessed wall basin, 405 mm wide
- One tap hole, left hand only
- No overflow

DIMENSIONS

The dimension drawing and full specifications from ADP follow on the next page.

Romano Indoor & Outdoor Solutions, 4/126 Canterbury Rd, Kilsyth South VIC 3137. 03 9720 4633. sales@romanoios.com.au

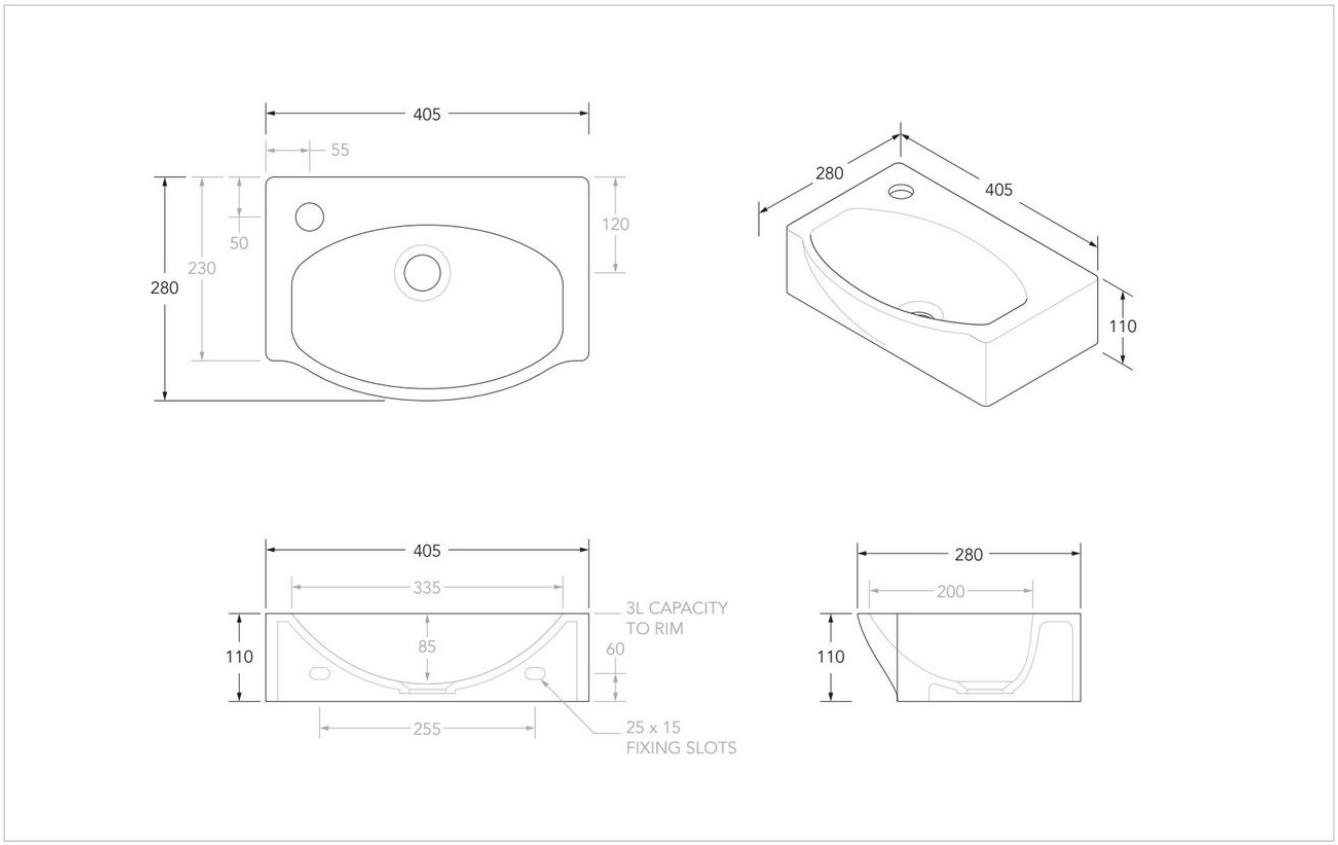

Adp

PRODUCT:	HUMPHREY SEMI-RECESSED
SIZE:	405W x 280D x 110H
CODE:	TOPCHUMSRWH
VERSION: 03	DATE: 25/10/2023

CAPACITY:	3L TO RIM
STYLE:	WALL BASIN, CENTRE BOWL
MATERIAL:	CERAMIC
FINISH:	GLOSS WHITE
TAP HOLE:	1 TAP HOLE (LEFT OFFSET ONLY)

NOTES:

DIMENSIONS ARE NOMINAL. DO NOT DRILL OR ROUGH IN UNTIL YOU HAVE RECIEVED AND MEASURED YOUR PRODUCT.
ALL DIMENSIONS ARE IN MILLIMETRES. DO NOT MEASURE FROM DRAWING.
THIS BASIN CAN BE WALL MOUNTED. FIXINGS NOT INCLUDED.
BASIN SUITS 32MM WASTE. ADP UNIVERSAL PLUG AND WASTE RECOMMENDED (SOLD SEPARATELY).
DUE TO THE MANUFACTURING NATURE OF CERAMICS, +/-5MM VARIATION IN SIZE AND DETAIL CAN BE EXPECTED.