ROMANO
Indoor & Outdoor Solutions

SPEC SHEET

ADP / INSET (DROP IN) BASIN

Glory Inset Basin



RANGE
Glory
TYPE
Inset (drop in) basin
SHAPE
Rectangle
MATERIAL
Solid surface
SIZE
545 x 355 mm
TAP HOLE
None
COLOURS
Gloss White, Matte White
CODE
TOPTGLO5536-G / TOPTGLO5536-TS

WARRANTY (DOMESTIC USE)

Solid surface basin: 7 years, plus 1 year parts and labour

Conditions: installed by a licensed tradesperson; manufacturing faults, proof of purchase; report damage within 48 hours of delivery. Summary of the ADP installation, care and warranty guide, checked 7 November 2026. Full terms from Romano or the brand.

FEATURES

- Drop-in bowl sitting about 13 mm above the benchtop
- Gloss or matte white solid surface
- Holds about 8 L

DIMENSIONS

The dimension drawing and full specifications from ADP follow on the next page.

Romano Indoor & Outdoor Solutions, 4/126 Canterbury Rd, Kilsyth South VIC 3137. 03 9720 4633. sales@romanoios.com.au

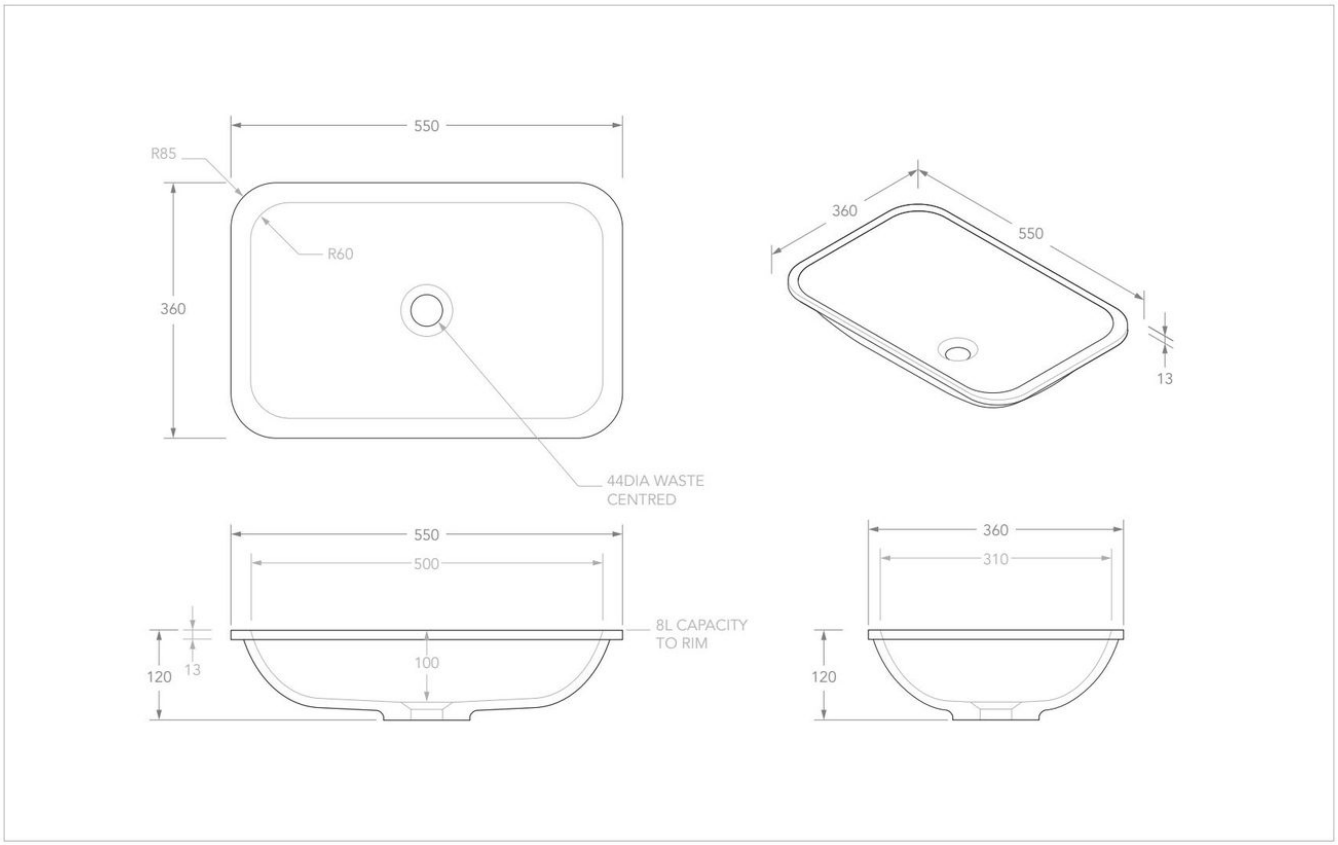

Adp

PRODUCT:	GLORY BASIN
SIZE:	550W x 360D x 120H
CODE:	TOPTGLOS536*
VERSION: 07	DATE: 13/07/2026

CAPACITY:	8L TO RIM
STYLE:	INSET / UNDER-COUNTER
MATERIAL:	SOLID SURFACE
FINISH*:	GLOSS WHITE (TOPTGLOS536-G) MATTE WHITE (TOPTGLOS536-TS)

NOTES:

DIMENSIONS ARE NOMINAL. DO NOT DRILL OR ROUGH IN UNTIL YOU HAVE RECIEVED AND MEASURED YOUR PRODUCT.
ALL DIMENSIONS ARE IN MILLIMETRES. DO NOT MEASURE FROM DRAWING.
BASIN SUITS 32MM WASTE. ADP UNIVERSAL PLUG AND WASTE RECOMMENDED (SOLD SEPARATELY).
BASIN CUT-OUT DXF DOWNLOAD AVAILABLE AT ADPAUSTRALIA.COM.AU