ROMANO
Indoor & Outdoor Solutions

SPEC SHEET

ADP / UNDER COUNTER BASIN

Carrie Under-Counter Basin



RANGE
Carrie
TYPE
Under counter basin
SHAPE
Oval
MATERIAL
Ceramic
SIZE
555 x 380 mm
TAP HOLE
None
OVERFLOW
Yes
COLOURS
Gloss White, Matte White
CODE
TOPCCAR5538GW / TOPCCAR5538MW

WARRANTY (DOMESTIC USE)

Ceramic basin: 1 year, plus 1 year parts and labour

Conditions: installed by a licensed tradesperson; manufacturing faults, proof of purchase; report damage within 48 hours of delivery. Summary of the ADP installation, care and warranty guide, checked 7 November 2026. Full terms from Romano or the brand.

FEATURES

- Oval undermount bowl
- Gloss or matte white
- Holds about 4.5 L to the overflow

DIMENSIONS

The dimension drawing and full specifications from ADP follow on the next page.

Romano Indoor & Outdoor Solutions, 4/126 Canterbury Rd, Kilsyth South VIC 3137. 03 9720 4633. sales@romanoios.com.au

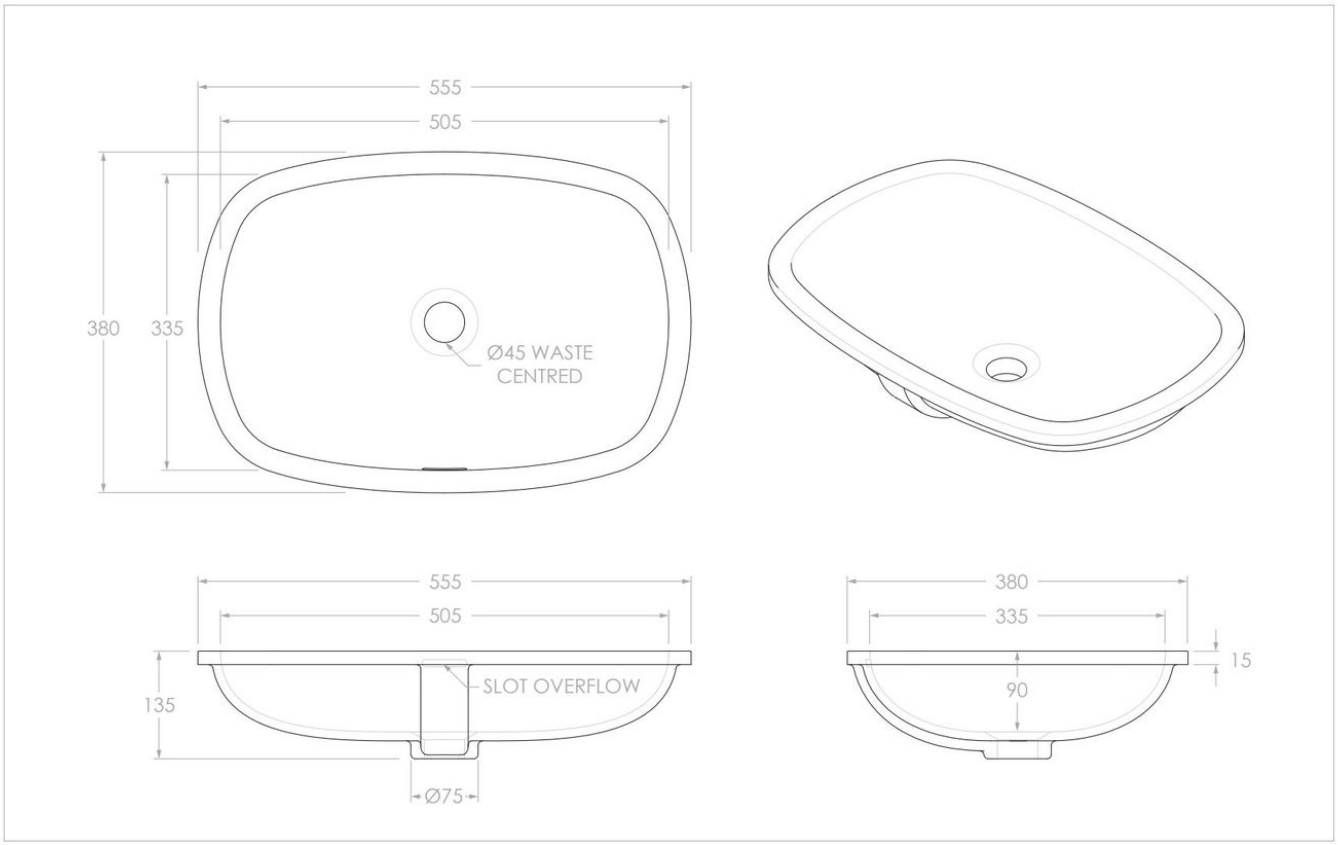

Adp

PRODUCT:	CARRIE UNDERCOUNTER BASIN
SIZE:	555W x 380D x 135H
CODE:	TOPCCAR5538*
VERSION: 02	DATE: 16/09/2026

CAPACITY:	4.5L TO OVERFLOW
STYLE:	UNDER COUNTER
MATERIAL:	CERAMIC
FINISH*:	GLOSS WHITE (TOPCCAR5538GW) MATTE WHITE (TOPCCAR5538MW)

NOTES:

DIMENSIONS ARE NOMINAL. DO NOT DRILL OR ROUGH IN UNTIL YOU HAVE RECIEVED AND MEASURED YOUR PRODUCT.
ALL DIMENSIONS ARE IN MILLIMETRES. DO NOT MEASURE FROM DRAWING.
BASIN SUITS 32MM WASTE. ADP UNIVERSAL PLUG AND WASTE RECOMMENDED (SOLD SEPARATELY).
DUE TO THE MANUFACTURING NATURE OF CERAMICS, +/-5MM VARIATION IN SIZE AND DETAIL CAN BE EXPECTED.