ROMANO
Indoor & Outdoor Solutions

SPEC SHEET

SCHWEIGEN / RANGEHOOD

UM1390 Silent Undermount Rangehood



RANGE
Silent Undermount
TYPE
Rangehood
WIDTH
89.8 cm
FUEL
Electric
FINISHES
Stainless steel, Black
CODE
UM1390-6S / UM1390-9S / UM1390-12S / UM1390-6BS / UM1390-9BS / UM1390-12BS

WARRANTY (DOMESTIC USE)

Silent and Design rangehoods: 5 years / Isodrive motor: 10 years (replacement in years 1 to 5, discounted replacement in years 6 to 10)

Conditions: domestic use (commercial use 3 months); installed to Schweigen's instructions; proof of purchase. Summary of the Schweigen warranty sheet, checked 7 November 2026. Full terms from Romano or the brand.

FEATURES

- Fits deeper cabinetry (390 mm) for a larger extraction zone
- Silent external Isodrive motor, 900 to 3200 m3/h depending on motor
- Soft-touch controls, 5 speeds, 15 minute auto shut-off
- Dishwasher-safe mesh filters, baffles optional
- Also in 60 cm and 120 cm widths

DIMENSIONS

The dimension drawing and full specifications from Schweigen follow on the next page.

Romano Indoor & Outdoor Solutions, 4/126 Canterbury Rd, Kilsyth South VIC 3137. 03 9720 4633. sales@romanoios.com.au

UM1390-6S, UM1390-9S, UM1390-12S // 60cm, 90cm & 120cm // SILENT



// UM1390-9S (90cm)

PRODUCT DESCRIPTION

- stainless steel finis
- silent Isodrive® motor system
- soft-touch controls, digital display
- 5 x speed levels
- 15 minute delay timer with auto shut-off
- 2 x LED lights
- stainless steel, dishwasher safe fil ers
- baffle tion available
- 5 Year Warranty on Canopy

TECHNICAL DATA

UM1390-6S
- dimensions: (W x D) 598 x 390mm
- 2 x mesh fil ers

UM1390-9S
- dimensions: (W x D) 898 x 390 mm
- 3 x mesh fil ers

UM1390-12S*
- dimensions: (W x D) 1181 x 390 mm
- 4 x mesh fil ers

ISODRIVE® OPTIONS

- **ST** single external motor
  - 900 m³/h airfl w
  - 200mm SteelFlex™ ducting (4m)
  - install roof/wall
  - rated power: 57W
- **SP** single external motor
  - 1600 m³/h airfl w
  - 200mm SteelFlex™ ducting (6m)
  - install roof/wall
  - rated power: 155W
- **SE** single external motor
  - 3200 m³/h airfl w
  - 250mm SteelFlex™ ducting (4m)
  - 200mm SteelFlex™ ducting (2m)
  - SE accessory kit required
  - install roof/wall
  - rated power: 137W

***Note:** The SE is used only by the UM1390-12S.





// UM1390-12S (120cm)





// UM1390-6S (60cm)

Simply discreet and concealed, this most recent addition to Schweigen's classic range is specially designed for the ultimate extraction of unwanted odours and cooking vapours.

The UM1390 fits deeper into cabinetry than most other undermount rangehoods. Due to its larger extraction zone, this model is simply exceptional in the removal of fats, oils and grease, leaving your kitchen fresher for longer.

UM1390-6S, UM1390-6BS // 60cm // **SILENT**

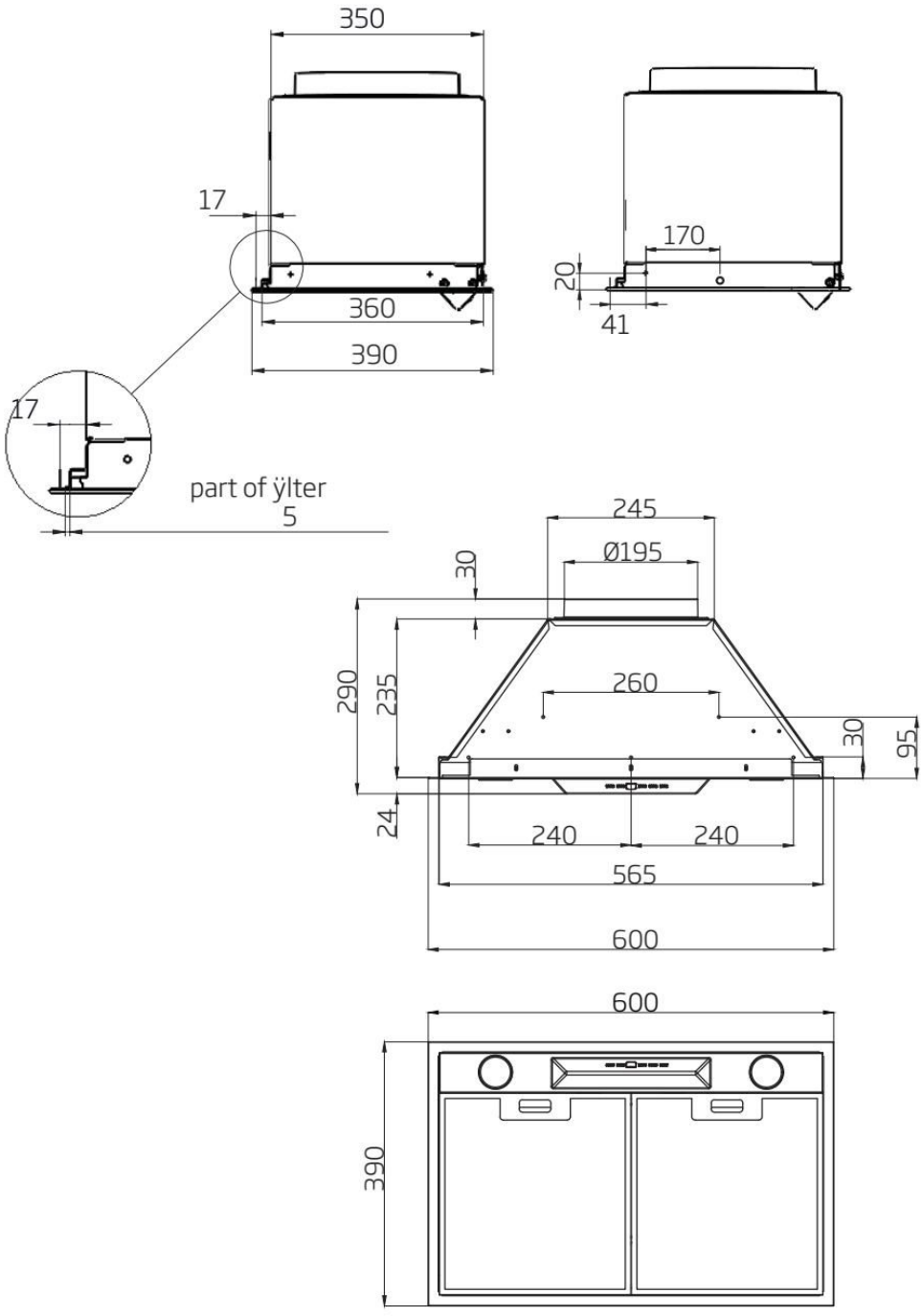

Model:	UM1390-6S, UM1390-6BS
Feeding Voltage:	220-240V 50Hz
Max Lamp Power:	2 x 3W