ROMANO
Indoor & Outdoor Solutions

SPEC SHEET

SCHWEIGEN / RANGEHOOD

SCC1000 Silent Ceiling Cassette Rangehood



RANGE
Silent Ceiling Cassette
TYPE
Rangehood
WIDTH
100 cm
FUEL
Electric
FINISHES
Stainless steel, Matte black, Gloss white
CODE
SCC1000-S / SCC1000B-S / SCC1000W-S

WARRANTY (DOMESTIC USE)

Silent and Design rangehoods: 5 years / Isodrive motor: 10 years (replacement in years 1 to 5, discounted replacement in years 6 to 10)

Conditions: domestic use (commercial use 3 months); installed to Schweigen's instructions; proof of purchase. Summary of the Schweigen warranty sheet, checked 7 November 2026. Full terms from Romano or the brand.

FEATURES

- Sits flush in the ceiling or bulkhead over an island
- Perimeter Aspiration
- Silent external Isodrive motor, 1600 or 3200 m3/h
- Free SteelFlex ducting
- Wall switch operation, smart switch compatible

DIMENSIONS

The dimension drawing and full specifications from Schweigen follow on the next page.

SCC1000-S, SCC1000B-S, SCC1000W-S // 100cm // **SILENT** Stainless Steel, Black or White



// SCC1000W-S (100 cm, gloss white)



// SCC1000S (100 cm, stainless steel)



// SCC1000B-S (100 cm, matte black)



The stylish and sophisticated SCC1000 ceiling cassette maintains uninterrupted views across your kitchen by being integrated seamlessly into the ceiling or bulkhead - perfect over island or peninsula style kitchen benches. Featuring finishes in stainless steel, gloss white or matte black with powerful and silent extraction, this beautiful hood will complement any modern kitchen design. With the technology of Perimeter Aspiration, airflow is targeted towards the perimeter of the rangehood, creating a more intense extraction area.

For greater ease and convenience, a WIFI Integrated Smart Switch can be used to connect this Schweigen Appliance to any home automated software such as Google Home or Alexa for voice-activated controls. Now you can power up and shut down your Schweigen Appliance without lifting a finger. *This integration requires the services of a licensed electrician with reference to the third party device's installation and operating manual.

PRODUCT DESCRIPTION

- Stainless steel, matte black and gloss white finishes available
- Perimeter Aspiration
- Ceiling/bulkhead cassette rangehood
- Silent Isodrive® motor system
- 2 x aluminium, dishwasher safe filters
- Free SteelFlex™ ducting
- Simple wall switch operation (wall switch is not provided)
- 5 Year Warranty on canopy

TECHNICAL DATA

SCC1000 (including variants)
- dimensions: (W x D) 1000 x 700 mm

ISODRIVE® OPTIONS

- **SP** single external motor
  - 1600 m³/h airflow
  - 200mm SteelFlex™ ducting (6m)
  - install roof/wall
  - rated power: 155W
- **SE** single external motor
  - 3200 m³/h airflow
  - 250mm SteelFlex™ ducting (4m)
  - 200mm SteelFlex™ ducting (2m)
  - 200mm to 250mm adaptor
  - install roof/wall
  - rated power: 137W

SCC1000-S, SCC1000B-S, SCC1000W-S // 100cm // **SILENT** Stainless Steel, Black or White

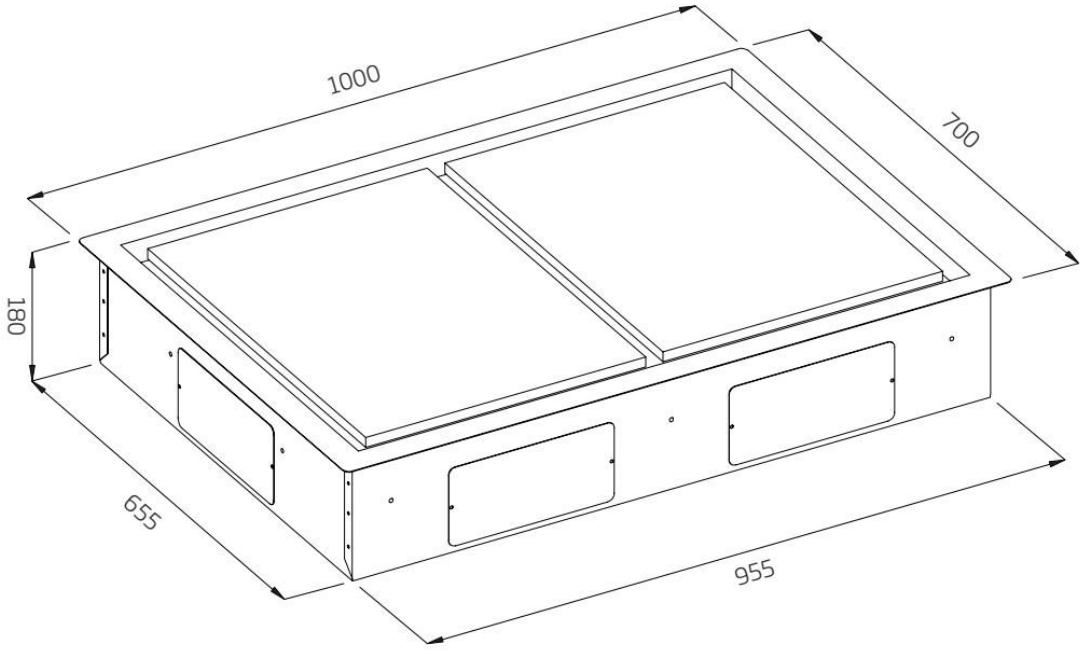

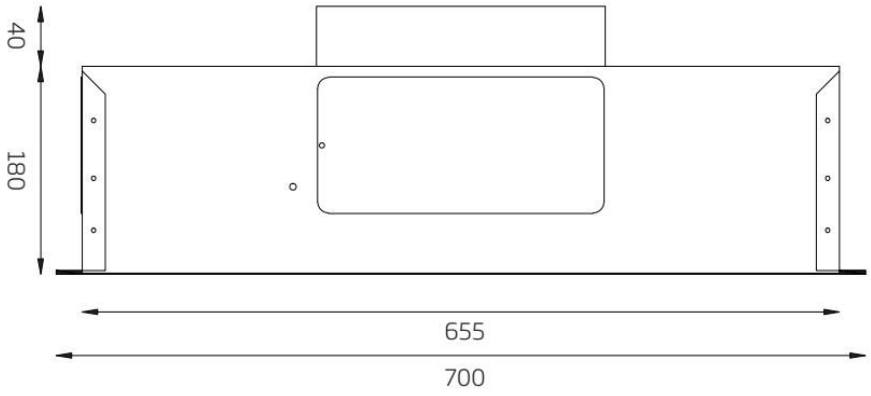

Model:	SCC1000-S SCC1000B-S SCC1000W-S
Feeding Voltage:	220-240V 50Hz