ROMANO
Indoor & Outdoor Solutions

SPEC SHEET

SCHWEIGEN / RANGEHOOD

Paradigma Silent Modular Ceiling Cassette

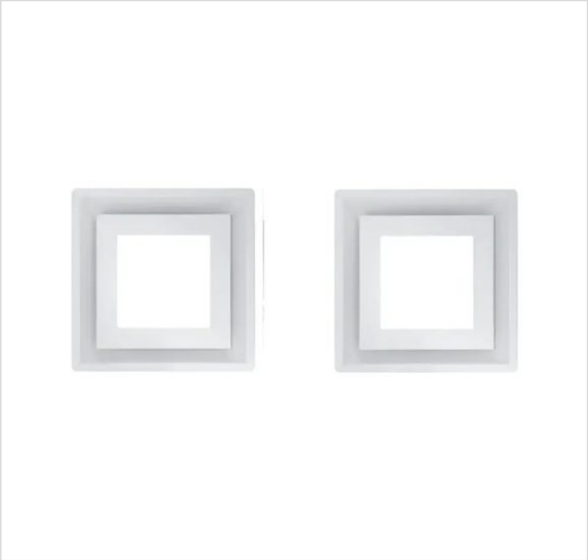

RANGE
Silent Ceiling Cassette
TYPE
Rangehood
FUEL
Electric
FINISHES
Stainless steel, White
CODE
CC-PARA2S / CC-PARA2W / CC-PARA3S / CC-PARA3W / CC-PARA4S / CC-PARA4W

WARRANTY (DOMESTIC USE)

Silent and Design rangehoods: 5 years / Isodrive motor: 10 years (replacement in years 1 to 5, discounted replacement in years 6 to 10)

Conditions: domestic use (commercial use 3 months); installed to Schweigen's instructions; proof of purchase. Summary of the Schweigen warranty sheet, checked 7 November 2026. Full terms from Romano or the brand.

FEATURES

- Good Design Award 2020 winner
- Modular 360 x 360 mm units combining light and extraction
- Sold as 2, 3 or 4 module sets
- Perimeter Aspiration, 4 speeds with remote
- Silent external Isodrive motor

DIMENSIONS

The dimension drawing and full specifications from Schweigen follow on the next page.

Paradigma // CC-PARA // SILENT Modular Ceiling Cassette

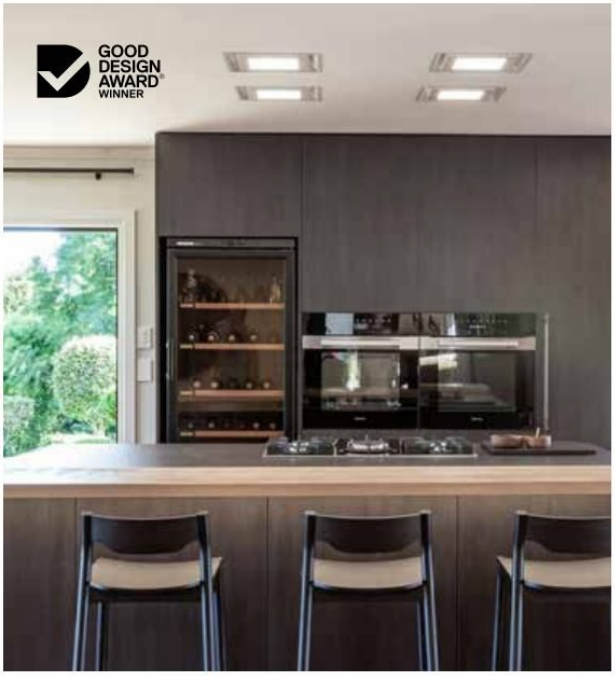



The PARADIGMA offers sleek style and combines light and extraction in several modular configurations, making it a versatile solution for the kitchen.



// Remote control



// CC-PARA2W





// CC-PARA3S



// Light panel drops down for easy access to filter



// CC-PARA4W

// Silent Moduar CC-PARA - Available in Stanless Steel and White

PRODUCT DESCRIPTION

- stainless steel or white
- Perimeter Aspiration
- easy-remove, dishwasher safe aluminium filters
- silent Isodrive® motor
- powerful, silent operation
- automatic power-off
- LED illumination
- 4 extraction fan speeds with remote control
- 5 Year Warranty

TECHNICAL DATA

- individual module dimensions: (W x D) 360 x 360 mm
- refer to Technical Information for number of aluminium filters included

***Note:** SE2 is only available with the PARA4W and PARA4.

ISODRIVE® OPTIONS

- **ST** single external motor
  - 900 m³/h airflow
  - 200mm SteelFlex™ ducting (4m)
  - install roof/wall
  - rated power: 57W
- **SP** single external motor
  - 1600 m³/h airflow
  - 200mm SteelFlex™ ducting (6m)
  - install roof/wall
  - rated power: 155W
- **SE** single external motor
  - 3200 m³/h airflow
  - 250mm SteelFlex™ ducting (4m)
  - 200mm SteelFlex™ ducting (2m)
  - SE accessory kit required
  - install roof/wall
  - rated power: 137W
- **SE2** Twin external motor
  - 5000 m³/h airflow
  - 2 x 250mm SteelFlex™ ducting (4m)
  - 2x 200mm SteelFlex™ ducting (2m)
  - 2 x 200-250mm reducer
  - install roof/wall
  - rated power: 274W

MODEL OPTIONS

CC-PARA4S: 1 control module, 3 subordinates (stainless steel)
CC-PARA4W: 1 control module, 3 subordinates (white)
CC-PARA3S: 1 control module, 2 subordinates (stainless steel)
CC-PARA3W: 1 control module, 2 subordinates (white)
CC-PARA2S: 1 control module, 1 subordinate (stainless steel)
CC-PARA2W: 1 control module, 1 subordinate (white)

Paradigma // CC-PARA // SILENT Modular Ceiling Cassette

GOOD DESIGN AWARD WINNER

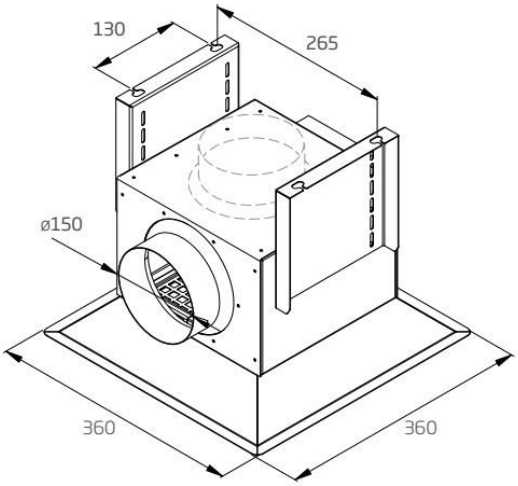

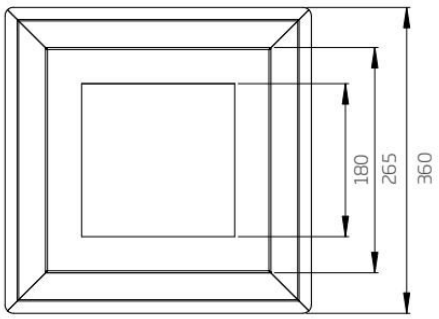

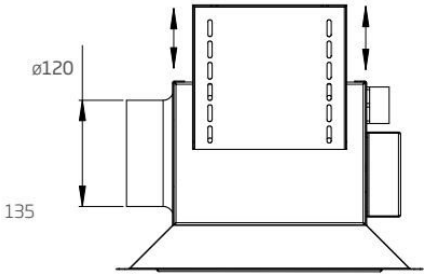

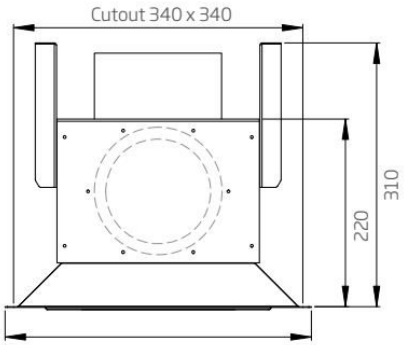

Model:	CC-PARA4S CC-PARA4W CC-PARA3S CC-PARA3W CC-PARA2S CC-PARA2W
Feeding Voltage:	220-240V 50Hz
Max Lamp Power:	1 x 11W 12V 4000k (LED Plate) 170 x 170mm