ROMANO
Indoor & Outdoor Solutions

SPEC SHEET

SCHWEIGEN / RANGEHOOD

KLS Glass Silent Undermount Rangehood



RANGE
Silent Undermount
TYPE
Rangehood
WIDTH
89.5 cm
FUEL
Electric
FINISHES
White glass, Black glass
CODE
KLS-9GLASS / KLS-9GLASSBLKS

WARRANTY (DOMESTIC USE)

Silent and Design rangehoods: 5 years / Isodrive motor: 10 years (replacement in years 1 to 5, discounted replacement in years 6 to 10)

Conditions: domestic use (commercial use 3 months); installed to Schweigen's instructions; proof of purchase. Summary of the Schweigen warranty sheet, checked 7 November 2026. Full terms from Romano or the brand.

FEATURES

- Opaque glass underside that wipes clean
- Perimeter Aspiration for a focused extraction zone
- Silent external or inline Isodrive motor
- SteelFlex safety ducting included
- Lifetime warranty on dishwasher-safe mesh filters

DIMENSIONS

The dimension drawing and full specifications from Schweigen follow on the next page.

KLS-9GLASSBLKS, KLS-9GLASS

schweigen



Protect your kitchen from airborne grease, smoke, steam, noise and odours without compromising its design with a sleek silent undermount rangehood.

This elegant Glass Undermount features an easy to clean surface and enhanced air extraction with the power of Perimeter Aspiration. Powered by the German-made Isodrive® motor uniquely mounted outside of the home (or along ductwork in the bulkhead, attic or ceiling space), this rangehood operates unseen and unheard to help keep the air in your kitchen cleaner and fresher for longer. It comes with the revolutionary Schweigen SteelFlex™ high-performance safety ducting and lifetime warranty-backed dishwasher-safe filters for peace of mind.

Available in a sleek opaque black or white glass finish, this rangehood will integrate seamlessly with any modern kitchen design.



The fire and pest proof Schweigen SteelFlex™ safety duct included

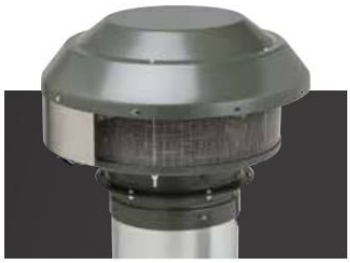

Silent operation using the German made Isodrive® external or Inline motor

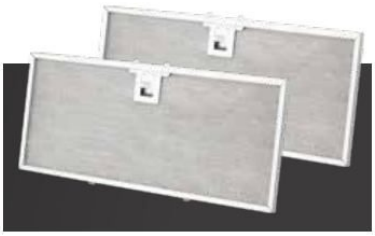

Peace-of-mind, **Lifetime Waranty** on fine mesh filters.

EXCLUSIVE TO Harvey Norman

KLS-9GLASSBLKS, KLS-9GLASS

schweigen

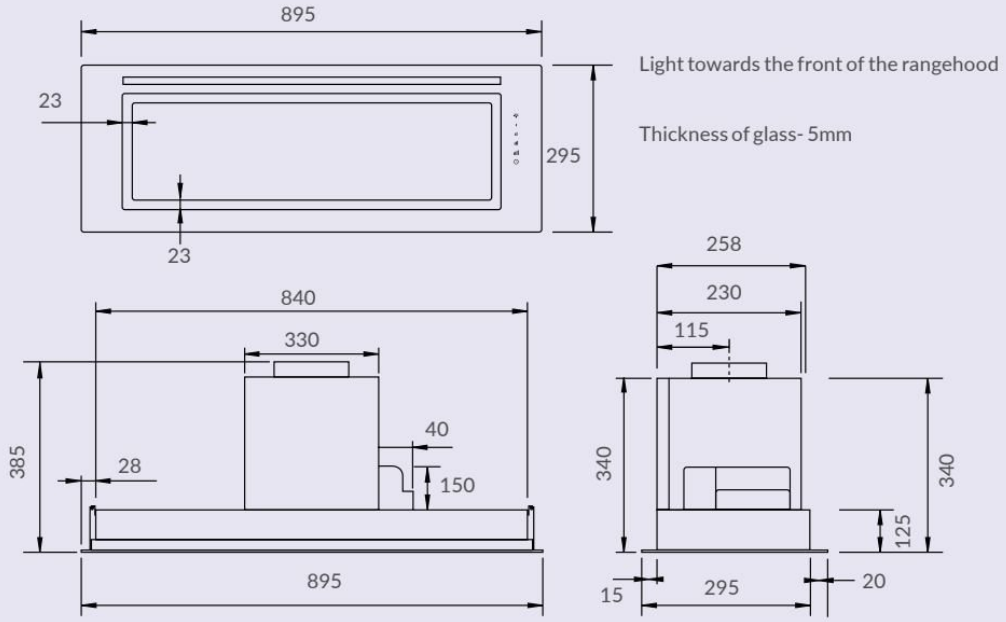

PRODUCT DESCRIPTION

- Black or White Glass
- Perimeter Aspiration
- 2 x stainless mesh filters, dishwasher safe
- LED Srip lighting
- 4 Speed, Touch sensitive controls
- Filter cleaning indicator
- Automatic shut-off
- 5 Year Rangehood Warranty

TECHNICAL DATA

KLS-9GLASS,
KLS-9GLASSBLK
- Glass Facia dimensions: (W x D) 895 x 295 mm

MOTOR INFORMATION

- German made IsoDrive® motor
- SP - single external or inline motor
  - 1600 m3/h airflow
  - 200mm SteelFlex™ ducting (6m)
  - install inline/roof/wall
- 10 Year Warranty on Motor
- SteelFlex™ safety duct included

TECHNICAL SPECIFICATIONS

Model	KLS-9GLASSBLKS, KLS-9GLASS
Feeding Voltage	220–240V 50Hz
Lamp Power — LED Strip Light (W)	1 x LED Strip 726mm long 3.36W 12V 3000k

EXCLUSIVE TO Harvey Norman