ROMANO
Indoor & Outdoor Solutions

SPEC SHEET

SCHWEIGEN / RANGEHOOD

Halo Island Rangehood



RANGE
Schweigen Design
TYPE
Rangehood
WIDTH
38.2 cm
FUEL
Electric
FINISHES
Matte black, White, Stainless steel, Gold, Copper
CODE
SDHALO

WARRANTY (DOMESTIC USE)

Silent and Design rangehoods: 5 years / Isodrive motor: 10 years (replacement in years 1 to 5, discounted replacement in years 6 to 10)

Conditions: domestic use (commercial use 3 months); installed to Schweigen's instructions; proof of purchase. Summary of the Schweigen warranty sheet, checked 7 November 2026. Full terms from Romano or the brand.

FEATURES

- Cylindrical pendant hood, 382 mm diameter
- Touchless gesture control plus remote
- Ring LED with adjustable 2900K to 6000K light
- Hand-painted three-coat finish with anti-fingerprint coating
- 1080 m3/h airflow, brushless motor

DIMENSIONS

The dimension drawing and full specifications from Schweigen follow on the next page.

Romano Indoor & Outdoor Solutions, 4/126 Canterbury Rd, Kilsyth South VIC 3137. 03 9720 4633. sales@romanoios.com.au

Halo // *ISLAND RANGEHOOD* // **Minimal, yet stunning**







AIRFLOW:
1080m³/h

HEIGHT X DIAMETER
958–1188 × 382 × 382 mm

FILTER:
1 x Fine Mesh

COLOURS



The smooth, simple form without visible buttons will attract the attention of every lover of minimalism and aesthetics.

Cylindrical Warm2ColdLED lighting. LED lighting (2900K - 6000K) in the form of a circle is the only peripheral solution used on the market. The cylindrical frame around the hood allows for precise illumination of the cooktop, which provides ideal cooking conditions.

Touchless GestureControl system. You can turn the hood on and off or change its operating mode without interrupting cooking, drying your hands or touching the control panel. Gesture Control technology allows you to turn the lighting on and off with one hand movement. Also comes with a convenient remote control.

High durability and aesthetics of colour. Each hand-painted with.3 coats of paint for greater resistance to grease, dirt and dust.

Runs virtually silent. The energy-efficient motor system uses up to 95% less energy compared to traditional motors of the same extraction rate. Keeps kitchen air fresher for longer.



Halo // *ISLAND RANGEHOOD* // **Minimal, yet stunning**

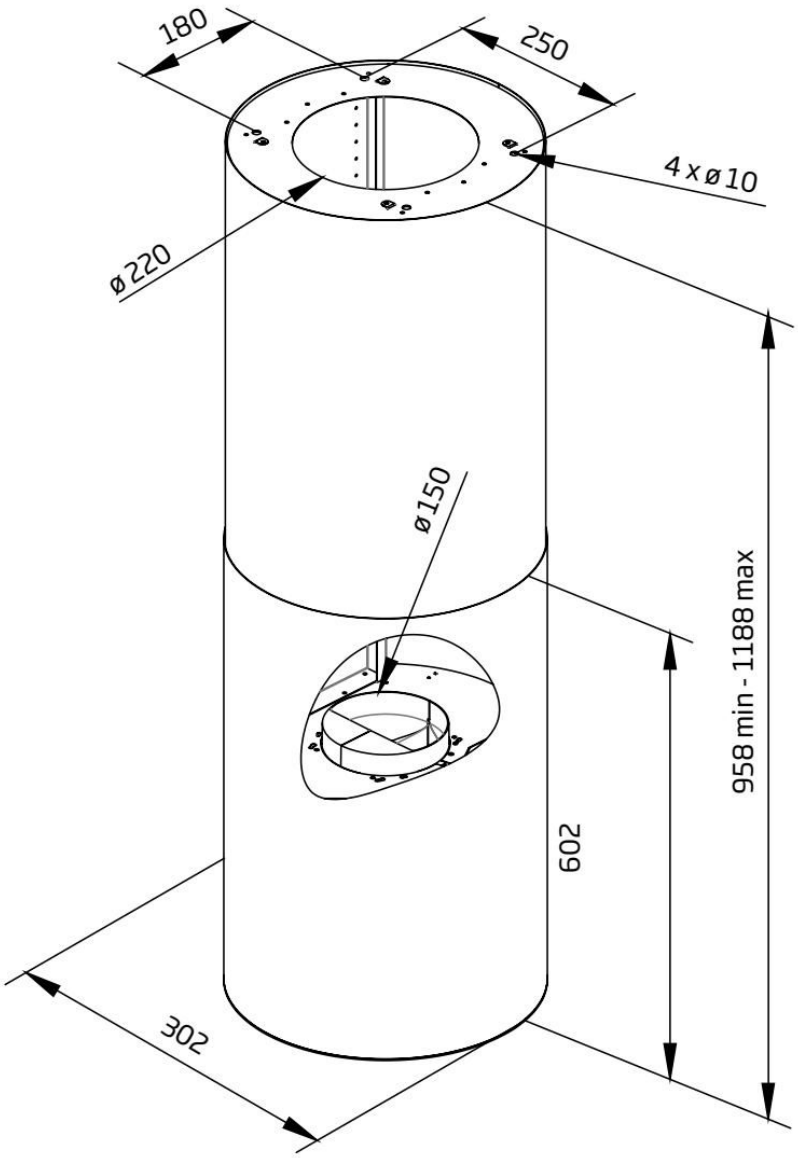

Model:	SDHALO
Feeding Voltage:	220-240V 50Hz
Max Lamp Power:	1 x Warm2Cold Cylindrical LED Lighting 8 W - 2900k to 6000k