ROMANO
Indoor & Outdoor Solutions

SPEC SHEET

SCHWEIGEN / RANGEHOOD

Aura Wallmount Rangehood 900mm



RANGE
Schweigen Design
TYPE
Rangehood
WIDTH
89.9 cm
FUEL
Electric
FINISHES
Matte black, White, Gold, Copper, Green, Beige
CODE
SDAURA-9

WARRANTY (DOMESTIC USE)

Silent and Design rangehoods: 5 years / Isodrive motor: 10 years (replacement in years 1 to 5, discounted replacement in years 6 to 10)

Conditions: domestic use (commercial use 3 months); installed to Schweigen's instructions; proof of purchase. Summary of the Schweigen warranty sheet, checked 7 November 2026. Full terms from Romano or the brand.

FEATURES

- Fluted wall hood, 562 mm high
- Touchless gesture control plus remote
- Warm2Cold LED, 2900K to 6000K
- Hand-painted finish with anti-fingerprint coating
- 1080 m3/h airflow

DIMENSIONS

The dimension drawing and full specifications from Schweigen follow on the next page.

Romano Indoor & Outdoor Solutions, 4/126 Canterbury Rd, Kilsyth South VIC 3137. 03 9720 4633. sales@romanoios.com.au

Aura // *WALLMOUNTED RANGEHOOD* // **Detail in Design**







AIRFLOW:
1080m³/h

DIMENSIONS:
H562 × W899 x D340mm

FILTER:
1 x Fine Mesh

COLOURS

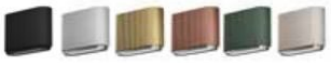

The elegant rippled surface easily attracts the eye of the design-conscious.

Warm2ColdLED lighting (2900K - 6000K) perfectly illuminates the cooktop and provides a range of lighting temperatures to suit.

Touchless GestureControl lets you operate the hood and its functions without having to physically touch the control panel. The Aura also comes with a remote control.



Aura // WALLMOUNTED RANGEHOOD // Detail in Design

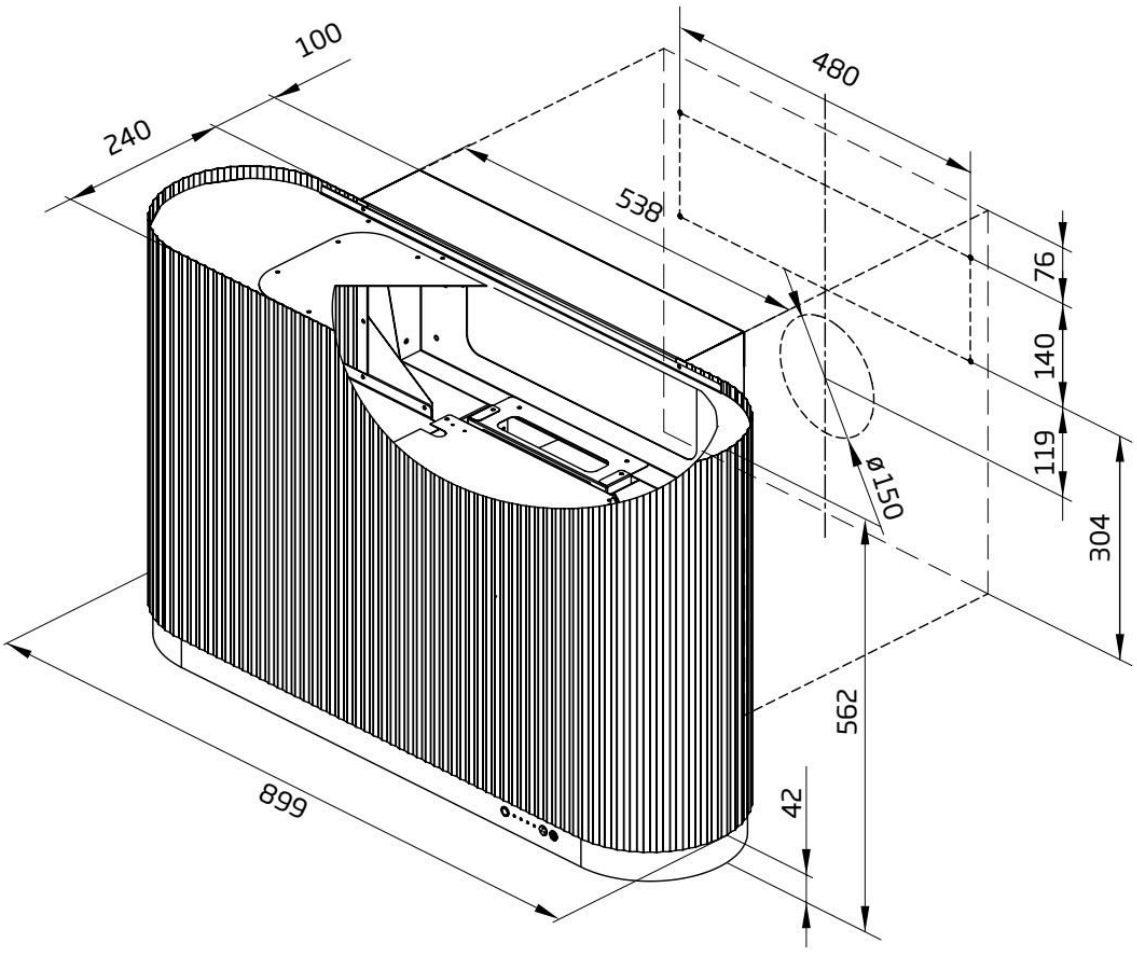

Model:	SDAURA
Feeding Voltage:	220-240V 50Hz
Max Lamp Power:	1 x Warm2Cold LED Lighting 5 W - 2900k to 6000k