ROMANO
Indoor & Outdoor Solutions

SPEC SHEET

FRANKE / INDUCTION COOKTOP

Mythos 77cm FlexPro Induction Cooktop

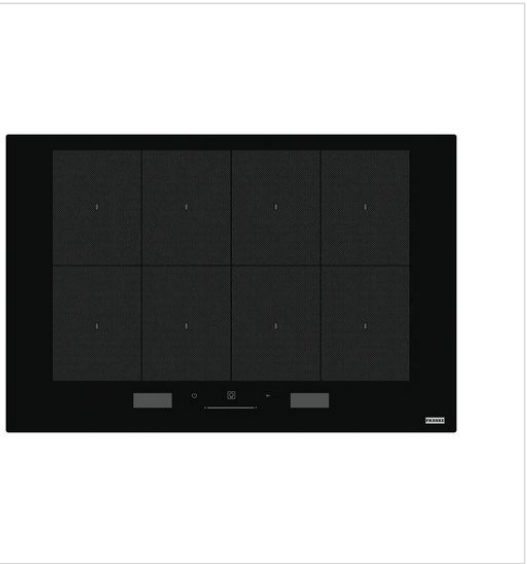

RANGE
Mythos
TYPE
Induction cooktop
WIDTH
77 cm
FUEL
Induction
FINISHES
Black glass
CODE
FMY808IFPBK

WARRANTY

Ask us for the warranty terms for this product: 03 9720 4633 or sales@romanoios.com.au.

FEATURES

- 8 flexible zones that join into larger cooking areas
- 18 power levels plus booster on every zone
- Slider control with LCD text display
- 7.4 kW total power

DIMENSIONS

The dimension drawing and full specifications from Franke follow on the next page.

FMY808IFPBK 77cm Induction Cooktop | 108.0613.588

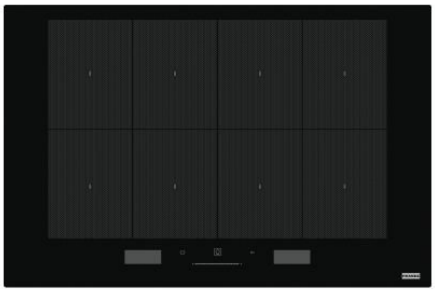

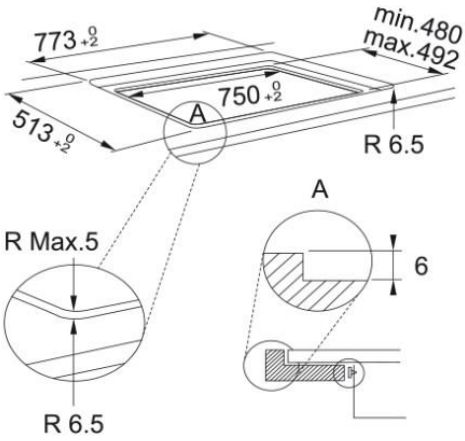

Experience the latest in technology with the Franke Mythos induction cooktops that lead the way in performance and style. These induction cooktops come equipped with 8 cooking zones that combine to give you a greater surface area on which to cook.

Aspect	
Type	Electric
Technology	Induction vitroceramic
Colour	Black
Finish	Glass
Power limitation	Yes
Dimensions	
Overall dimensions	75x50
Width overall	770.0
Cutout depth	490.0
Cutout width	750.0
Packaging depth	600.0
Packaging width	860.0
Energy specifications	
MAX Booster nominal power (W)	1800.0
Total Power (kW)	7.4
Voltage	220-240 V
Frequency (Hz)	50-60
Product features	
Installation type	Standard&flush
Bridge zone	No
Flexi zone	No
Safety lock	Yes
Cook Assist	Beverages
Cook Assist	Boiling
Cook Assist	Cheese (Boiling)
Cook Assist	Cheese (Grilling)
Cook Assist	Cheese (Pan frying)

Pages from Franke's own specification. Ask us about this product, we're happy to help.
Romano Indoor & Outdoor Solutions, 4/126 Canterbury Rd, Kilsyth South VIC 3137. 03 9720 4633. sales@romanoios.com.au

Cook Assist	Custom
Cook Assist	Desserts
Cook Assist	EASYCOOK
Cook Assist	Eggs
Cook Assist	Fish (Boiling)
Cook Assist	Fish (Grilling)
Cook Assist	Fish (Pan frying)
Cook Assist	FLEXPRO (unique cooking zone)
Cook Assist	Grilling
Cook Assist	Keep warm
Cook Assist	Meat (Boiling)
Cook Assist	Meat (Grilling)
Cook Assist	Meat (Pan frying)
Cook Assist	Melting
Cook Assist	Moka
Cook Assist	Pan frying
Cook Assist	Pasta & Rice (Boiling)
Cook Assist	Pasta & Rice (Pan frying)
Cook Assist	Pasta & Rice (Rice)
Cook Assist	PROCOOK (4 cooking zones)
Cook Assist	Sauces/Gravies/Soups
Cook Assist	Simmering
Cook Assist	Vegetables (Boiling)
Cook Assist	Vegetables (Grilling)
Cook Assist	Vegetables (Pan frying)
Frame shape	Frameless
Glass dimension (mm)	770x510
Hob/hood connection	No
Power cord length	1500.0
Power management (kW)	2.5 – 4.0 – 6.0 – 7.4
Display colour	White
Supply cord	Yes
B.power of h.zone FT L (W)	1800
PWR of h.zone FT L (W)	1200
B.pow. of h.zone FT R (W)	1800
PWR of h.zone FT R (W)	1200
B.pow.of h.zone MID F (W)	1800
PWR of h.zone MID FT (W)	1200
B.pow.of h.zone MID L (W)	1800
PWR of h.zone MID L (W)	1200
B.pow.of h.zone MID MID (W)	1800
PWR of h.zone MID MID (W)	1200
B.pow.of h.zone MID R (W)	1800
PWR of h.zone MID R (W)	1200
B.power of h.zone RR L (W)	1800
PWR of h.zone RR L (W)	1200
B.power of h.zone RR R (W)	1800

Pages from Franke's own specification. Ask us about this product, we're happy to help.
Romano Indoor & Outdoor Solutions, 4/126 Canterbury Rd, Kilsyth South VIC 3137. 03 9720 4633. sales@romanoios.com.au