ROMANO
Indoor & Outdoor Solutions

SPEC SHEET

ARTUSI / INDUCTION COOKTOP

90cm Induction Cooktop

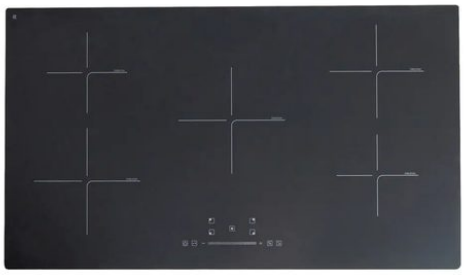

RANGE
Nano Matte Black
TYPE
Induction cooktop
WIDTH
90 cm
FUEL
Induction
FINISHES
Nano matte black
CODE
AID9005NB

WARRANTY (DOMESTIC USE)

Parts and labour: 2 years / Extra when registered: 3 years (5 years in total)

Conditions: domestic use; the extra 3 years needs the appliance registered with Artusi; indoor appliances used outdoors are covered for 3 months only. Summary of the Artusi warranty, checked 7 November 2026. Full terms from Romano or the brand.

FEATURES

- 5 induction zones
- Illuminated touch-slide controls
- Booster function, 9 power levels
- Automatic pan detection
- Matte black ceramic glass

DIMENSIONS

The dimension drawing and full specifications from Artusi follow on the next page.

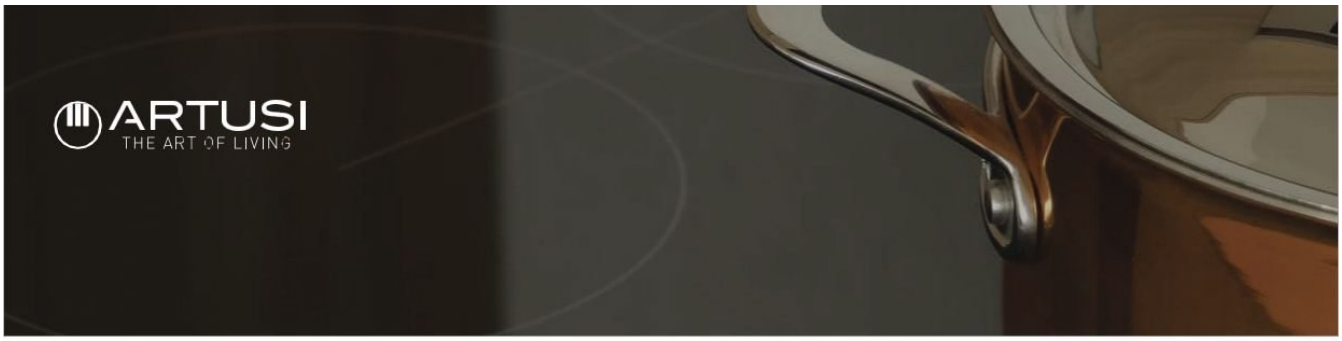

90cm Induction Cooktop

AID9005NB

EAN 9347777007919

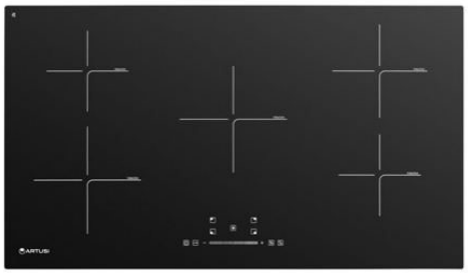

Finish
- Matt Black Glass
- Ceramic Glass

Features
- Induction cooktop
- Front panel with illuminated touch controls
- 5 x Induction zones
- 9 cooking levels
- Booster heating function
- Automatic Pan Senor and zone activation with indicator light

Safety
- Residual heat indicators
- Automatic safety switch off
- Child Lock

Induction Zone Power
- Front left Zone: 2100W
- Rear left Zone: 1500W
- Middle Zone: 2100W
- Front right Zone: 1500W
- Rear right Zone: 2100W
- Total Rated Power: 9300W
- Technical Information:
- Hardwired 220-240V

Dimensions:
- Product: 900mm (W) x 520mm (H) x 60mm (D)
- Cut Out: 835mm (W) x 475mm (D)

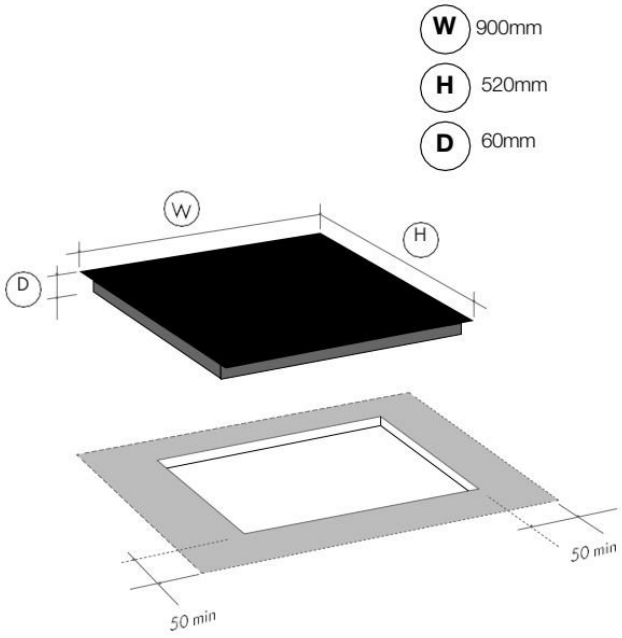

Updated: 10SEP2026

Australia National Telephone Number 1300 694
583 For showroom opening times, visit our website
artusi.com.au

Head Office
NSW & ACT
48-50 Moore Street
Leichhardt

Victoria
2r/131 Church Street
Hawthorn

QLD
Contact Head Office

WA & NT
Contact Head Office

DISCLAIMER: Worldwide Appliances Pty Ltd, is continually seeking ways to improve the design specifications, aesthetics and production techniques of its products. As a result alterations to our products and designs take place continually. Whilst every effort is made to produce information and literature that is up to date, this brochure should not be regarded as an infallible guide to the current specifications, nor does it constitute an offer for the sale of any particular product. Product dimensions indicated in our literature is indicative only. Actual product only should be used to define dimension cut outs. Distributors, and retailers are not agents of Worldwide Appliances and are not authorised to bind Worldwide Appliances by any express or implied undertaking or representation.