ROMANO
Indoor & Outdoor Solutions

SPEC SHEET

ARTUSI / RANGEHOOD

90cm Concealed Undermount Rangehood

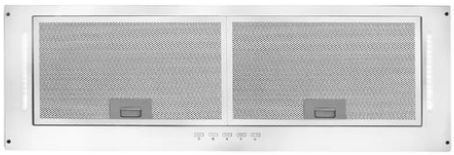

RANGE
Classic
TYPE
Rangehood
WIDTH
90 cm
FINISHES
Stainless steel, Matte black
CODE
AUM90 / AUM90B

WARRANTY (DOMESTIC USE)

Parts and labour: 2 years / Extra when registered: 3 years (5 years in total)

Conditions: domestic use; the extra 3 years needs the appliance registered with Artusi; indoor appliances used outdoors are covered for 3 months only. Summary of the Artusi warranty, checked 7 November 2026. Full terms from Romano or the brand.

FEATURES

- Hidden in the overhead cabinet
- 750 m^3/h airflow
- 3 speeds with push-button control
- 2 LED lights
- 56.5 dBA maximum

DIMENSIONS

The dimension drawing and full specifications from Artusi follow on the next page.

Concealed Rangehood

ARTUSI
THE ART OF LIVING

MODEL AUM60 & AUM90





*2+3 Years with product registration



PRODUCT INFORMATION

FINISH
- Stainless steel

FEATURES
- concealed under-mount design
- 3 speeds
- push-button control
- 2 x 1.5W LED lights
- 56.5 dBA max.

FILTERS
- aluminium mesh filters

MOTOR
- 750m³/hr airflow
- Ø150mm ducting

AUM60 EAN 9347777000477
AUM90 EAN 9347777000484

AR10122025

DISCLAIMER
Eurolinx & Worldwide appliances pty Ltd, is continually seeking ways to improve the design specifications, aesthetics and production techniques of its products. As a result alterations to our products and designs take place continually. Whilst every effort is made to produce information and literature that is up to date, this brochure should not be regarded as an infallible guide to the current specifications, nor does it constitute an offer for the sale of any particular product. Product dimensions indicated in our literature is indicative only. Actual product only should be used to define dimension cut outs. Distributors, and retailers are not agents of Eurolinx or Worldwide appliances and are not authorised to bind Eurolinx or Worldwide appliances by any express or implied undertaking or representation.

Australia National Telephone Number 1300 694 583
For showroom opening times, visit our website

artusi.com.au

NSW & ACT (Head Office)
48-50 Moore Street
Leichhardt
F 02 8569 4699

Victoria
2r/131 Church Street
Hawthorn

QLD
Contact Head Office

WA & NT
Contact Head Office

Concealed Rangehood

ARTUSI
THE ART OF LIVING

MODEL AUM60 & AUM90

TECHNICAL DIAGRAM

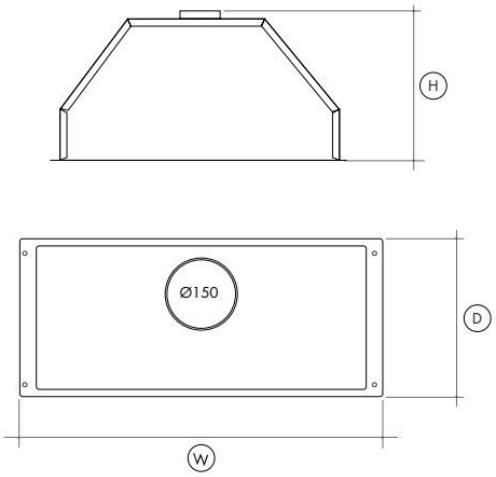

W 600mm or 900mm

H 297mm

D 290mm

Technical Information
Concealed under-mount range hood
Electrical Connection: 10AMP GPO
3-pin plug and cord
150W motor

NB: drawings are not to scale — for detailed installation instructions, please refer to user guide.

AR10122025

AUM60 EAN 9347777000477
AUM90 EAN 9347777000484

DISCLAIMER

Eurolinx & Worldwide appliances pty Ltd, is continually seeking ways to improve the design specifications, aesthetics and production techniques of its products. As a result alterations to our products and designs take place continually. Whilst every effort is made to produce information and literature that is up to date, this brochure should not be regarded as an infallible guide to the current specifications, nor does it constitute an offer for the sale of any particular product. Product dimensions indicated in our literature is indicative only. Actual product only should be used to define dimension cut outs. Distributors, and retailers are not agents of Eurolinx or Worldwide appliances and are not authorised to bind Eurolinx or Worldwide appliances by any express or implied undertaking or representation.

Australia National Telephone Number 1300 694 583
For showroom opening times, visit our website

artusi.com.au

NSW & ACT (Head Office)
48-50 Moore Street
Leichhardt
F 02 8569 4699

Victoria
2r/131 Church Street
Hawthorn

QLD
Contact Head Office

WA & NT
Contact Head Office