ROMANO
Indoor & Outdoor Solutions

SPEC SHEET

ARTUSI / OUTDOOR KITCHEN

Piazza 186cm Outdoor Kitchen with Integrated Bar Fridge and Ice Maker



RANGE
Piazza
TYPE
Outdoor kitchen
WIDTH
186 cm
FUEL
Gas
FINISHES
Matte black
CODE
AOKP4INTNFICE / AOK1900 / ABBQ2MB / ABBQMBH2 / AINT119/NF2 / AIM4009B

WARRANTY (DOMESTIC USE)

Outdoor products: 2 years

Conditions: domestic use; the 2+3 year registration offer does not apply to BBQs, lids or beverage chillers; proof of purchase. Summary of the Artusi warranty, checked 7 November 2026. Full terms from Romano or the brand.

FEATURES

- Fully panelled look: the bar fridge sits behind an integrated cabinet door
- Adds a dedicated ice maker to the 80cm built-in gas BBQ and roasting hood
- Sintered stone top that resists scratches, heat, stains and UV
- Satin black enamelled steel doors, frame and base
- Storage cupboard and ventilated backing panel for the appliances

DIMENSIONS

The dimension drawing and full specifications from Artusi follow on the next page.



Piazza Outdoor Kitchen

AOK1900

Option 1: 9347777007650
Option 2: 9347777007667
Option 3: 9347777007674
Option 4: 9347777007681

FINISH

- Sintered stone top: a durable, non-porous surfacing material made from 100% natural minerals. It is highly resistant to scratches, heat, stains and UV rays
- Powder coated aluminium cabinets, steel base & frame all in matt black

CONSTRUCTION

- Steel base under the BBQ to protect the storage area from heat
- Steel frame to securely house an LPG bottle if needed
- Partition panel to protect the fridge or beverage cooler from direct heat of the BBQ compartment
- Assembly: designed to be assembled by two people, tools supplied and instruction manual available
- Storage cupboard with door for protected storage
- Backing panel with ventilation for appliances

DESIGN

- Soft close cabinet doors
- Waterfall stone sides
- Levelling feet
- Integrated door panel supplied (pre-drilled for installation of the AINT119/NF2)
- Modular base for seamless installation of the ABC1B Beverage Cooler

LAYOUTS & APPLIANCE COMBINATIONS

OPTION 1: AOKP1BEV - Included Products: AOK1900, ABBQ2MB, ABBQMBH2, ABC1B

OPTION 2: AOKP2BEVICE - Included Products: AOK1900, ABBQ2MB,ABBQMBH2,ABC1B, AIM4009B

OPTION 3: AOKP3INTNF - Included Products AOK1900, ABBQ2MB,ABBQMBH2, AINT119/NF2

OPTION 4: AOKP4INTNFICE - Included Products AOK1900, ABBQ2MB,ABBQMBH2,AINT119/NF2, AIM4009B

Our outdoor kitchen blends premium quality with striking modern design, delivering a practical and versatile solution for the perfect Australian entertaining space. Engineered for both function and style, they feature a functional layout that adapts to your needs and complements any setting. Built to suit any space and entertaining style, they make outdoor entertaining seamless. Each unit boasts a durable sintered stone top paired with a sleek satin black enamelled steel doors, frame and base ensuring your outdoor area is as functional and stylish as your indoor kitchen.



Pictured with ABC1B Beverage Cooler



Pictured with AINT119/NF2 Bar Fridge

W 1860mm
H 950mm
D 744mm

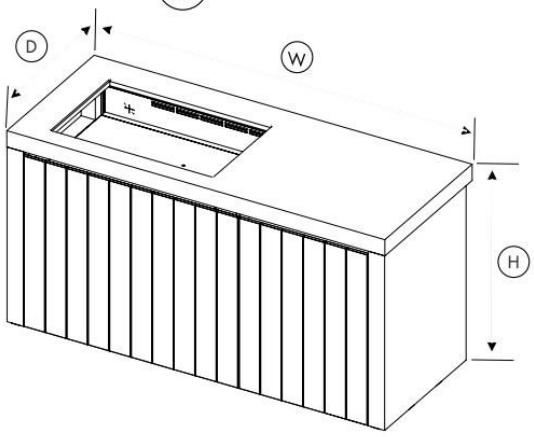

Australia National Telephone Number 1300 694 583
For showroom opening times, visit our website
artusi.com.au

Head Office
NSW & ACT
48-50 Moore Street
Leichhardt

Victoria
2r/131 Church Street
Hawthorn

QLD
Contact Head Office

WA & NT
Contact Head Office

DISCLAIMER: Worldwide Appliances Pty Ltd, is continually seeking ways to improve the design specifications, aesthetics and production techniques of its products. As a result alterations to our products and designs take place continually. Whilst every effort is made to produce information and literature that is up to date, this brochure should not be regarded as an infallible guide to the current specifications, nor does it constitute an offer for the sale of any particular product. Product dimensions indicated in our literature is indicative only. Actual product only should be used to define dimension cut outs. Distributors, and retailers are not agents of Worldwide Appliances and are not authorised to bind Worldwide Appliances by any express or implied undertaking or representation.